BOARD OF COUNTY COMMISSIONERS
SARPY COUNTY, NEBRASKA
RESOLUTION AUTHORIZING CHAIRMAN TO SIGN LETTER OF CONSENT TO MODIFICATIONS OF THE SARPY COUNTY CELL TOWER

WHEREAS, pursuant to Neb. Rev. Stat. §23-104(6)(Reissue 2012), the County has the power to do all acts in relation to the concerns of the County necessary to the exercise of its corporate powers; and,

WHEREAS, pursuant to Neb. Rev. Stat. §23-103(Reissue 2012), the powers of the County as a body are exercised by the County Board; and,

WHEREAS, Sarpy County has a property lease agreement ("Lease Agreement") with Omaha Cellular Limited Partnership (now Verizon Wireless); and,

WHEREAS, Verizon Wireless is in the process of upgrading its wireless technology and has requested the County's consent to modifications (with connecting appurtenances) of the Sarpy County Cell Tower, as described in the attached letter ("Consent Letter"); and,

WHEREAS, Verizon Wireless has also provided a structural analysis and technical drawings detailing the modifications and these drawings have been reviewed; and,

WHEREAS, the County desires to consent to the modifications of the Sarpy County Cell Tower.

NOW, THEREFORE, BE IT RESOLVED BY THE SARPY COUNTY BOARD OF COMMISSIONERS, THAT the Chairman of this Board, together with the County Clerk are hereby authorized to sign on behalf of this Board, the Consent Letter, and any other related documents the same being approved by the Board..

The above Resolution was approved by a vote of the Sarpy County Board of Commissioners at a public meeting duly held in accordance with applicable law on the 15th day of July, 2014.

Sarpy County Board Chairman

Attest:

SEAL

County Clerk

Sarpy County Board of Commissioners

1210 GOLDEN GATE DRIVE
PAPILLION, NE
593-4155
www.sarpy.com

ADMINISTRATOR Mark Wayne
DEPUTY ADMINISTRATOR Scott Bovick
FISCAL ADMIN./PURCHASING AGT. Brian Hanson

COMMISSIONERS
Don Kelly District 1
Jim Thompson District 2
Tom Richards District 3
Brenda Carlisle District 4
Jim Warren District 5

Memo

To: Sarpy County Board

From: Brian Hanson

Re: Cell Tower Modifications

On July 15, 2014, the Sarpy County Board will be asked to authorize the Board Chairman to sign the attached Consent to Modifications form for Verizon Wireless.

Sarpy County owns the tower structure located on the east side of the Hall of Justice. We lease space on the tower to Verizon Wireless. The lease provides that Verizon's antennas and electronic equipment may not interfere with Sarpy County's communications equipment or exceed the load bearing capacity of the tower.

The structural analysis and technical drawings describing the proposed modifications provided by Verizon have been reviewed and approved by Neil Johnson from Sarpy County E911 Communications. Based on Neil's review, I recommend approval of the attached resolution.

July 10, 2014

Brian Hanson dp
Brian E. Hanson

BEH/mg

cc: Mark Wayne
Scott Bovick
Deb J. Houghtaling
Brad Rice
Marilyn Gable
Neil Johnson
Bonnie Moore

Buell Consulting, Inc.
2324 University Avenue West, Suite 200
Saint Paul, Minnesota 55114-1854
(651) 225-0792
www.buellconsulting.com
Site Acquisition
Permitting
Established 1991

COMPLETE AND FAX TO Robert Loinaz
#651-225-0795
Or via email to: rloinaz@siteac-llc.com

CONSENT TO MODIFICATIONS

Verizon Wireless Site Name: OMA Papillion (Alltel) MOD

Site Address: 1210 Golden Gate Drive, Papillion, NE 68046

The County of Sarpy, ("*Lessor*") acknowledges receipt of a request for consent to a site modification with connecting appurtenances currently located at the above referenced site. "*Lessor*" hereby consents to the proposed modifications.

***LESSOR*:**

By: Jim Thompson
Its: County Board Chairman

July 15, 2014
Date

ACCESS INFORMATION

Please indicate the name and telephone number of the person that Verizon Wireless needs to contact in order to coordinate the logistics of the proposed antenna change.

Neil Johnson — 402-593-5900

Name — Telephone Number

Please list any special considerations that need to be taken into account in coordinating the proposed upgrade. For example, please list any dates of special events, other scheduled maintenance, special hours request, and the like that may interfere with the proposed Verizon Wireless upgrade.

Brian Hanson

From: Neil Johnson
Sent: Wednesday, July 09, 2014 4:12 PM
To: Brian Hanson
Cc: Marilyn Gable; Mark Wayne; Chris Vance; Jim Tracy
Subject: RE: 2014 Cell Tower Property Lease Agreement 1210 Golden Gate Dr 1994-03-29 Omaha Cellular Limited Partnership Verizon Request for Consent to Add Appurtenances

Brian,

Jim and I have reviewed the documentation provided by Verizon.

We do not believe that the proposed changes in Verizon's operations will have any detrimental affect on any of Sarpy County's systems.

In addition, it appears that they have successfully conducted a thorough analysis of the structural aspects of the project.

Accordingly, we conclude that there is no technical objection to having the County provide the requested consent.

Regards,
Neil Johnson

From: Brian Hanson
Sent: Wednesday, July 09, 2014 7:38 AM
To: Neil Johnson
Cc: Marilyn Gable; Mark Wayne; Chris Vance
Subject: FW: 2014 Cell Tower Property Lease Agreement 1210 Golden Gate Dr 1994-03-29 Omaha Cellular Limited Partnership Verizon Request for Consent to Add Appurtenances

Neil, Verizon is requesting to make some changes to our tower. Would you review their request and let me know if they are acceptable? Thanks for your help!

Brian

From: Chris Vance
Sent: Tuesday, July 08, 2014 1:23 PM
To: Brian Hanson
Cc: Clerk Email
Subject: 2014 Cell Tower Property Lease Agreement 1210 Golden Gate Dr 1994-03-29 Omaha Cellular Limited Partnership Verizon Request for Consent to Add Appurtenances

Hi Brian,

Attached is Verizon's "Request for Consent" to make changes to a County cell tower. After you have heard back from Neil Johnson, please let us know how to proceed.

Buell Consulting, Inc.
2324 University Avenue West, Suite 200
Saint Paul, Minnesota 55114-1854
(651) 225-0792
www.buellconsulting.com
Site Acquisition
Permitting
Established 1991

July 2, 2014

RECEIVED
JUL 8 2014
SARPY COUNTY CLERK'S OFFICE
ADMINISTRATION DEPT.

The County of Sarpy
1210 Golden Gate Drive
Papillion, NE 68046

Attn: County Clerk

RE: Tower Construction and Property Lease Agreement dated March 29, 1994 between The County of Sarpy [Lessor] and Omaha Cellular Limited Partnership [Tenant].

Verizon Wireless Site Name: OMA Papillion (Alltel) MOD
Site Address: 1210 Golden Gate Drive, Papillion, NE 68046

Dear Sir or Madam:

Verizon Wireless is in the process of upgrading their wireless network to incorporate technology known as "PCS" . As technology advances, it is necessary for Verizon Wireless to upgrade their equipment, which will consist of adding appurtenances at the site. The enclosed construction drawings outline the specifics of this modification. Also, a structural review of the building has been done, and a copy of the analysis is attached.

On page two of this letter, a form is provided for The County of Sarpy to indicate their consent for the proposed modification. Please complete the form and return it to me as soon as possible either by email at: rloinaz@siteac-llc.com or via fax at 651-225-0795. A return envelope has been included for the original.

Do not hesitate to contact me at 612-284-5300 with any questions or concerns you may have.

Sincerely,

Robert Loinaz

Robert Loinaz
Buell Consulting, Inc.
Agent for Verizon Wireless

32 W 273 Army Trail Road, Suite # 100, Wayne, IL 60184
HUTTER TRANKINA ENGINEERING
CONSULTING STRUCTURAL ENGINEERS
Phone: 630-513-6711 Fax: 630-513-2925
htedesign.com

June 2, 2014
Revised: July 1, 2014

Mr. Dennis Murphy
Terra Consulting Group, Ltd.
600 Busse Highway
2nd Floor
Park Ridge, IL 60068-2568

Re: VZN: Papillion LTE AWS (OMA)
Terra # 63080
Hutter Trankina # 13294B

Dear Mr. Murphy:

Per your request, we have analyzed the above-referenced tower, which is located at 1210 Golden Gate Drive in Papillion, Nebraska. The following paragraphs summarize our findings.

PURPOSE

The purpose of this analysis was to verify the structural adequacy of the existing tower to resist new and existing equipment loads as specified by Verizon.

DESCRIPTION

- **Tower**

  The tower is a 180'-0" tall, monopole tower that is 52.6" diameter at the base and tapers to 13.2" diameter at the top. The tower is of high strength steel A572-65 (Fy = 65 ksi). The tower model was based on a previous structural analysis report by SSC, Inc. dated 5/31/12.

- **Base Plate / Anchor Bolts**

  The tower has (24) 2¼" diameter anchor bolts of high-strength steel (Fy = 75 ksi, Fu = 100 ksi). It was assumed that the anchor bolt embedment was sufficient to develop the full anchor bolt tensile capacity. The base plate is 67" in diameter, 3" thick and of Fy = 60 ksi steel.

- **Foundation**

  The original foundation design reactions for the tower, listed below, are from Valmont job # 1467 dated 6/1/94. The original design reactions were based on allowable stress design (ASD). Our analysis was performed using ultimate stress design; thus, the original ASD reactions are multiplied by 1.35 to convert the values to ultimate values per TIA-222-G code in section 15.5.1. The tower foundation is acceptable because the original design reactions are greater than the calculated reactions, as shown in the table below.

Load Type	Allowable Footing Reaction	Footing Reaction x 1.35	Proposed Loading Reactions
Moment (ft*k)	4894	6607	3763
Shear (k)	54.8	74	40

ANTENNA CONFIGURATION

The following antenna layout was employed in the analysis:

Elevation	Antenna or Appurtenance	Qty.	Coax Dia.	Coax Qty.	Comments
190'	Whip 3" x 20'	2	1¼"	2	Existing
190'	Dipole 20'	1	⅞"	1	Existing
180'	Flash Beacon	1			Existing
180'	Lightning Rod ⅝" dia. x 4'	1			Existing
180'	13' Platform w/out handrails (CaAa = 35 sq. ft.)	1			Existing
170'	Dipole 20'	2	⅞"	2	Existing
164'	Whip 1¼" dia. x 8'	1	⅞"	1	Existing
160'	6' Side Arm (CaAa = 7 sq. ft. typ.)	2			Existing
150'	Whip ½" dia. x 6'	1	⅞"	1	Existing
147'	6' Side Arm	1			Existing
125'	Dipole 20'	1	⅞"	1	Existing
121'	Yagi 12"	2	½"	2	Existing
115'	6' Side Arm	2			Existing
112'	Ice Shield 5' x 6.5'	1			Existing
110'	6' Dish w/ radome	1	2"	1	Existing
104'	22" x 10" x ¾" Panel	1	1¼"	1	Existing
104'	TMA	1			Existing
89'	6' Dish w/ radome	1	EW105	1	Existing
85'	Ice Shield 4' x 5.5'	1			Existing
80'	4' Dish w/ radome	1	1¼"	1	Existing
77'	Whip 1½" dia. x 8'	2	⅞"	2	Existing
73'	Antel WPA-70063-8CF	6	⅞"	6	Existing
73'	SBNH-1D6565C	3	⅞"	3	Proposed
73'	**AIR32**	**3**	**⅞"**	**3**	**Proposed**
73'	12' Platform w/ handrails	1			Existing

Elevation	Antenna or Appurtenance	Qty.	Coax Dia.	Coax Qty.	Comments
73'	**RRUS12**	**3**			**Future**
73'	**Raycap RCMDC-3315-PF-48**	**1**	**1 ⅝"**	**1**	**Future**
72'	**Standoff Arm (CaAa = 1.5 sq. ft./each)**	**3**			**Future**
65'	PADX6-59AC w/ radome (CaAa = 26.3 sq. ft.)	1	E60	1	Existing
59'	4' Grid Dish	1	⅞"	1	Existing
52'	Whip 18"	1	½"	1	Existing
52'	6' Side Arm	1			Existing
26.5'	Yagi 12"	3	½"	2	Existing
26.5'	Yagi 2.5'	1	⅞"	1	Existing
26.5'	6' Side Arm	1			Existing

- Antenna information was obtained from the site modification change order.

Critical Deflections and Radius of Curvature - Service Wind

Elevation ft	*Appurtenance*	*Deflection in*	*Tilt °*	*Twist °*	*Radius of Curvature ft*
110.00	6 Ft Dish	9.632	0.8971	0.0088	4637
89.00	6 Ft Dish (HP)	6.163	0.6694	0.0063	6780
80.00	P-105A48-2	4.938	0.5856	0.0053	6807
65.00	PADX6-59AC	3.214	0.4623	0.0039	6441
59.00	KP4F-25	2.641	0.4170	0.0034	6304

ANALYSIS PROCEDURE AND RESULTS

The existing structure was subjected to the TIA/EIA-222-G Code standards. The following three (3) loading cases were considered:

I. Forces due to a wind speed of 90 mph (3 second gust).

II. Forces due to a wind speed of 40 mph (3 second gust) in conjunction with ¾" (min.) ice build-up around all elements.

III. Forces due to a service wind speed of 60 mph (3 second gust).

The following stress ratios were determined:

Tower	60%
Anchor Bolts	50%
Base Plate	38%
Foundation	Passed

CONCLUSION

Based on the performed calculations, the existing tower is **structurally acceptable** to resist the wind loads imposed by the existing, proposed and future equipment.

Should you have any questions regarding this report or require further analysis, please feel free to contact us.

Sincerely,

Jeffrey Lapp
Project Engineer

John L. Trankina
President

PROFESSIONAL STRUCTURAL ENGINEER
JOHN L. TRANKINA
E-0031
7/2/14
STATE OF NEBRASKA

Structural Calculations

For

Verizon

Papillion LTE AWS (OMA) PCS Mod

1210 Golden Gate Drive
Papillion, Nebraska

June 2, 2014
Revised: July 1, 2014

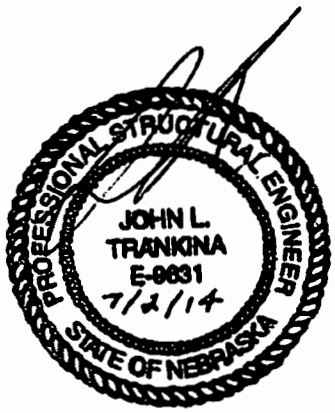

PREPARED BY:
HUTTER TRANKINA ENGINEERING
32 W 273 Army Trail Road, Suite 100, Wayne, IL 60184

Phone: 630-513-6711 Fax: 630-513-2925
htedesign.com

Project # 13294B

Section	1	2	3	4
Length (ft)	50.00	51.33	48.33	48.00
Number of Sides	12	12	12	12
Thickness (in)	0.2190	0.3125	0.4690	0.5625
Socket Length (ft)	4.00	5.33	6.33	
Top Dia (in)	13.2000	23.3420	33.2890	41.5642
Bot Dia (in)	24.7000	35.1400	43.9600	52.6000
Grade	A572-65			
Weight (K) 30.2	2.2	5.1	9.1	13.8

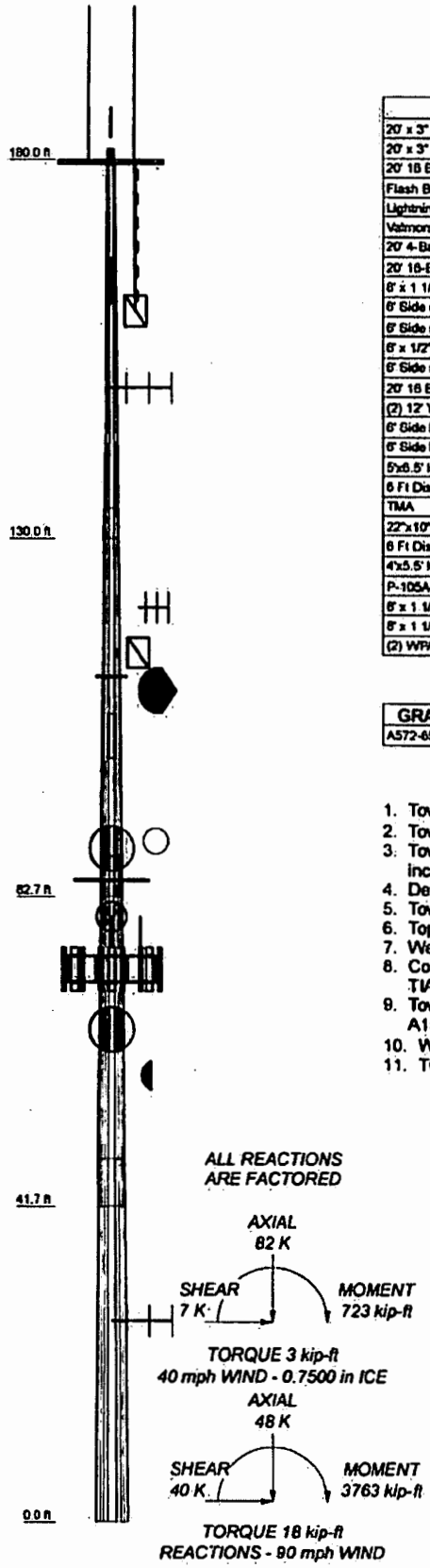

DESIGNED APPURTENANCE LOADING

TYPE	ELEVATION	TYPE	ELEVATION
20' x 3" Whip	190	Pirod 12' Platform w/ handrails	73
20' x 3" Whip	190	Andrew SBNH-1D6565C w/ mount pipe	73
20' 16 Bay Di-Pole	190	Andrew SBNH-1D6565C w/ mount pipe	73
Flash Beacon Lighting	180	Andrew SBNH-1D6565C w/ mount pipe	73
Lightning Rod 5/8x4'	180	Ericsson AIR 32 w/ mount pipe	73
Valmont 13' Platform w/o Rails	180	Ericsson AIR 32 w/ mount pipe	73
20' 4-Bay DiPole	170	Ericsson AIR 32 w/ mount pipe	73
20' 16-Bay DiPole	170	RRUS12 w/ 4' mount pipe	73
8' x 1 1/4" Whip	164	RRUS12 w/ 4' mount pipe	73
6' Side mount w/ Service Grating	160	RRUS12 w/ 4' mount pipe	73
6' Side mount w/ Service Grating	160	Raycap RCMDC-3315-PF-48 w/ 4' mount pipe	73
6' x 1/2" Yagi	150	(2) WPA-70063/8CF-EDIN-4	73
6' Side mount w/ Service Grating	147	(2) WPA-70063/8CF-EDIN-4	73
20' 16 Bay DiPole	125	Side Arm Mount	72
(2) 12' Yagi	121	Side Arm Mount	72
6' Side Mount w/ Service Grating	115	Side Arm Mount	72
6' Side Mount w/ Service Grating	115	PADX6-56AC	65
5'x6.5' Ice Shield	112	KP4F-25	59
6 Ft Dish	110	18" Whip	52
TMA	104	6' Side mount w/ Service grating	52
22"x10"x3/4" Panel	104	(3) 12" Yagi	26.5
6 Ft Dish (HP)	89	2.5' Yagi	26.5
4'x5.5' Ice Shield	85	6' Side mount w/ Service grating	26.5
P-105A48-2	80		
8' x 1 1/2" Whip	77		
8' x 1 1/2" Whip	77		
(2) WPA-70063/8CF-EDIN-4	73		

MATERIAL STRENGTH

GRADE	Fy	Fu	GRADE	Fy	Fu
A572-65	65 ksi	80 ksi			

TOWER DESIGN NOTES

1. Tower designed for Exposure C to the TIA-222-G Standard.
2. Tower designed for a 90 mph basic wind in accordance with the TIA-222-G Standard.
3. Tower is also designed for a 40 mph basic wind with 0.75 in ice. Ice is considered to increase in thickness with height.
4. Deflections are based upon a 60 mph wind.
5. Tower Structure Class III.
6. Topographic Category 1 with Crest Height of 0.00 ft
7. Weld together tower sections have flange connections.
8. Connections use galvanized A325 bolts, nuts and locking devices. Installation per TIA/EIA-222 and AISC Specifications.
9. Tower members are "hot dipped" galvanized in accordance with ASTM A123 and ASTM A153 Standards.
10. Welds are fabricated with ER-70S-6 electrodes.
11. TOWER RATING: 59.9%

Hutter Trankina Engineering
32W273 Army Trail Road
Wayne, IL 60184
Phone: 630-513-6711
FAX: 630-513-2925
www.htedesign.com

Job: VZN Papillion LTE AWS (HTE # 13294B)			
Project: 1210 Golden Gate Drive; Papillion, NE 68046			
Client: Terra Consulting Group Ltd	Drawn by: Jeff Lapp	App'd.	
Code: TIA-222-G	Date: 07/01/14	Scale: NTS	
Path:		Dwg No. E-1	

Tower Input Data

There is a pole section.
This tower is designed using the TIA-222-G standard.
The following design criteria apply:

Basic wind speed of 90 mph.
Structure Class III.
Exposure Category C.
Topographic Category 1.
Crest Height 0.00 ft.
Nominal ice thickness of 0.7500 in.
Ice thickness is considered to increase with height.
Ice density of 56 pcf.
A wind speed of 40 mph is used in combination with ice.
Temperature drop of 50 °F.
Deflections calculated using a wind speed of 60 mph.
Weld together tower sections have flange connections..
Connections use galvanized A325 bolts, nuts and locking devices. Installation per TIA/EIA-222 and AISC Specifications..
Tower members are "hot dipped" galvanized in accordance with ASTM A123 and ASTM A153 Standards..
Welds are fabricated with ER-70S-6 electrodes..
A non-linear (P-delta) analysis was used.
Pressures are calculated at each section.
Stress ratio used in pole design is 1.
Local bending stresses due to climbing loads, feed line supports, and appurtenance mounts are not considered.

Options

Consider Moments - Legs
Consider Moments - Horizontals
Consider Moments - Diagonals
Use Moment Magnification
√ Use Code Stress Ratios
√ Use Code Safety Factors - Guys
Escalate Ice
Always Use Max Kz
Use Special Wind Profile
√ Include Bolts In Member Capacity
√ Leg Bolts Are At Top Of Section
Secondary Horizontal Braces Leg
√ Use Diamond Inner Bracing (4 Sided)
Add IBC .6D+W Combination

Distribute Leg Loads As Uniform
Assume Legs Pinned
√ Assume Rigid Index Plate
√ Use Clear Spans For Wind Area
√ Use Clear Spans For KL/r
√ Retension Guys To Initial Tension
Bypass Mast Stability Checks
√ Use Azimuth Dish Coefficients
√ Project Wind Area of Appurt.
√ Autocalc Torque Arm Areas
SR Members Have Cut Ends
Sort Capacity Reports By Component
√ Triangulate Diamond Inner Bracing
Use TIA-222-G Tension Splice Capacity Exemption

Treat Feedline Bundles As Cylinder
Use ASCE 10 X-Brace Ly Rules
√ Calculate Redundant Bracing Forces
Ignore Redundant Members in FEA
SR Leg Bolts Resist Compression
All Leg Panels Have Same Allowable
Offset Girt At Foundation
Consider Feedline Torque
√ Include Angle Block Shear Check
Poles
Include Shear-Torsion Interaction
Always Use Sub-Critical Flow
Use Top Mounted Sockets

Tapered Pole Section Geometry

Section	Elevation ft	Section Length ft	Splice Length ft	Number of Sides	Top Diameter in	Bottom Diameter in	Wall Thickness in	Bend Radius in	Pole Grade
L1	180.00-130.00	50.00	4.00	12	13.2000	24.7000	0.2190	0.8760	A572-65 (65 ksi)
L2	130.00-82.67	51.33	5.33	12	23.3420	35.1400	0.3125	1.2500	A572-65 (65 ksi)
L3	82.67-41.67	46.33	6.33	12	33.2899	43.9600	0.4690	1.8760	A572-65 (65 ksi)
L4	41.67-0.00	48.00		12	41.5642	52.6000	0.5625	2.2500	A572-65 (65 ksi)

Tapered Pole Properties

Section	Tip Dia. in	Area in^2	I in^4	r in	C in	I/C in^3	J in^4	It/Q in^3	w in	w/t
L1	13.6656	9.1539	196.8840	4.6472	6.8376	28.7943	398.9403	4.5053	2.9507	13.473
	25.5713	17.2635	1320.6064	8.7642	12.7946	103.2159	2675.9066	8.4966	6.0327	27.546
L2	25.1172	23.1734	1568.7198	8.2446	12.0912	129.7411	3178.6516	11.4053	5.4182	17.338
	36.3796	35.0452	5425.7371	12.4682	18.2025	298.0762	10994.0143	17.2482	8.5800	27.456
L3	35.7351	49.5655	6815.0166	11.7499	17.2442	395.2068	13809.0712	24.3946	7.6648	16.343
	45.5107	65.6792	15856.7013	15.5698	22.7713	696.3465	32129.9758	32.3253	10.5244	22.44
L4	44.5371	74.2643	15935.6126	14.6786	21.5302	740.1504	32289.8715	36.5506	9.6317	17.123
	54.4555	94.2529	32577.1900	18.6294	27.2468	1195.6336	66010.2190	46.3884	12.5893	22.381

Tower Elevation ft	Gusset Area (per face) ft^2	Gusset Thickness in	Gusset Grade	Adjust. Factor A_f	Adjust. Factor A_r	Weight Mult.	Double Angle Stitch Bolt Spacing Diagonals in	Double Angle Stitch Bolt Spacing Horizontals in
L1 180.00-130.00				1	1	1		
L2 130.00-82.67				1	1	1		
L3 82.67-41.67				1	1	1		
L4 41.67-0.00				1	1	1		

Feed Line/Linear Appurtenances - Entered As Round Or Flat

Description	Sector	Component Type	Placement ft	Total Number	Number Per Row	Start/End Position	Width or Diameter in	Perimeter in	Weight plf
1 5/8	C	Surface Ar (CaAa)	73.00 - 10.00	1	1	0.000 0.000	1.9800		1.04

Feed Line/Linear Appurtenances - Entered As Area

Description	Face or Leg	Allow Shield	Component Type	Placement ft	Total Number		C_AA_A ft^2/ft	Weight plf
Safety Line 3/8	C	No	CaAa (Out Of Face)	180.00 - 10.00	1	No Ice	0.00	0.22
						1/2" Ice	0.00	0.22

Description	Face or Leg	Allow Shield	Component Type	Placement ft	Total Number		C_AA_A ft²/ft	Weight plf
						1" Ice	0.00	0.22
1 1/4	C	No	Inside Pole	180.00 - 10.00	2	No Ice	0.00	0.66
						1/2" Ice	0.00	0.66
						1" Ice	0.00	0.66
7/8	C	No	Inside Pole	180.00 - 10.00	1	No Ice	0.00	0.54
						1/2" Ice	0.00	0.54
						1" Ice	0.00	0.54
7/8	C	No	Inside Pole	160.00 - 10.00	3	No Ice	0.00	0.54
						1/2" Ice	0.00	0.54
						1" Ice	0.00	0.54
7/8	C	No	Inside Pole	147.00 - 10.00	1	No Ice	0.00	0.54
						1/2" Ice	0.00	0.54
						1" Ice	0.00	0.54
1/2	C	No	Inside Pole	147.00 - 10.00	2	No Ice	0.00	0.25
						1/2" Ice	0.00	0.25
						1" Ice	0.00	0.25
7/8	C	No	Inside Pole	115.00 - 10.00	1	No Ice	0.00	0.54
						1/2" Ice	0.00	0.54
						1" Ice	0.00	0.54
2	C	No	Inside Pole	110.00 - 10.00	1	No Ice	0.00	1.16
						1/2" Ice	0.00	1.16
						1" Ice	0.00	1.16
1 1/4	C	No	Inside Pole	104.00 - 10.00	1	No Ice	0.00	0.66
						1/2" Ice	0.00	0.66
						1" Ice	0.00	0.66
EW105	C	No	Inside Pole	89.00 - 10.00	1	No Ice	0.00	0.29
						1/2" Ice	0.00	0.29
						1" Ice	0.00	0.29
1 1/4	C	No	Inside Pole	80.00 - 10.00	1	No Ice	0.00	0.66
						1/2" Ice	0.00	0.66
						1" Ice	0.00	0.66
7/8	C	No	CaAa (Out Of Face)	73.00 - 10.00	2	No Ice	0.11	0.54
						1/2" Ice	0.21	1.52
						1" Ice	0.31	2.50
7/8	C	No	Inside Pole	73.00 - 10.00	6	No Ice	0.00	0.54
						1/2" Ice	0.00	0.54
						1" Ice	0.00	0.54
WE60	C	No	Inside Pole	65.00 - 10.00	1	No Ice	0.00	0.68
						1/2" Ice	0.00	0.68
						1" Ice	0.00	0.68
7/8	C	No	Inside Pole	59.00 - 10.00	1	No Ice	0.00	0.54
						1/2" Ice	0.00	0.54
						1" Ice	0.00	0.54
1/2	C	No	Inside Pole	26.50 - 10.00	3	No Ice	0.00	0.25
						1/2" Ice	0.00	0.25
						1" Ice	0.00	0.25
7/8	C	No	Inside Pole	26.50 - 10.00	1	No Ice	0.00	0.54
						1/2" Ice	0.00	0.54
						1" Ice	0.00	0.54
AVA5-50(7/8)	C	No	Inside Pole	73.00 - 10.00	6	No Ice	0.00	0.30
						1/2" Ice	0.00	0.30
						1" Ice	0.00	0.30

Feed Line/Linear Appurtenances Section Areas

Tower Section	Tower Elevation ft	Face	A_R ft²	A_F ft²	C_AA_A In Face ft²	C_AA_A Out Face ft²	Weight K

Tower Section	Tower Elevation ft	Face	A_R ft²	A_F ft²	C_AA_A In Face ft²	C_AA_A Out Face ft²	Weight K
L1	180.00-130.00	A	0.000	0.000	0.000	0.000	0.00
		B	0.000	0.000	0.000	0.000	0.00
		C	0.000	0.000	0.000	0.000	0.17
L2	130.00-82.67	A	0.000	0.000	0.000	0.000	0.00
		B	0.000	0.000	0.000	0.000	0.00
		C	0.000	0.000	0.000	0.000	0.29
L3	82.67-41.67	A	0.000	0.000	0.000	0.000	0.00
		B	0.000	0.000	0.000	0.000	0.00
		C	0.000	0.000	6.203	6.893	0.58
L4	41.67-0.00	A	0.000	0.000	0.000	0.000	0.00
		B	0.000	0.000	0.000	0.000	0.00
		C	0.000	0.000	6.271	6.967	0.54

Feed Line/Linear Appurtenances Section Areas - With Ice

Tower Section	Tower Elevation ft	Face or Leg	Ice Thickness in	A_R ft²	A_F ft²	C_AA_A In Face ft²	C_AA_A Out Face ft²	Weight K
L1	180.00-130.00	A	2.185	0.000	0.000	0.000	0.000	0.00
		B		0.000	0.000	0.000	0.000	0.00
		C		0.000	0.000	0.000	0.000	0.17
L2	130.00-82.67	A	2.105	0.000	0.000	0.000	0.000	0.00
		B		0.000	0.000	0.000	0.000	0.00
		C		0.000	0.000	0.000	0.000	0.29
L3	82.67-41.67	A	1.996	0.000	0.000	0.000	0.000	0.00
		B		0.000	0.000	0.000	0.000	0.00
		C		0.000	0.000	19.396	33.278	1.17
L4	41.67-0.00	A	1.792	0.000	0.000	0.000	0.000	0.00
		B		0.000	0.000	0.000	0.000	0.00
		C		0.000	0.000	18.914	32.254	1.10

Shielding Factor Ka

Tower Section	Feed Line Record No.	Description	Feed Line Segment Elev.	K_a No Ice	K_a Ice
L2	20	1 5/8	82.67 - 73.00	1.0000	1.0000
L3	20	1 5/8	41.67 - 73.00	1.0000	1.0000

Discrete Tower Loads

Description	Face or Leg	Offset Type	Offsets: Horz Lateral Vert ft ft ft	Azimuth Adjustment °	Placement ft		C_AA_A Front ft^2	C_AA_A Side ft^2	Weight K
Lightning Rod 5/8x4'	A	From Leg	0.00	0.0000	180.00	No Ice	0.25	0.25	0.03
			0.00			1/2" Ice	0.66	0.66	0.03
			5.00			1" Ice	1.07	1.07	0.03
Flash Beacon Lighting	A	From Leg	0.00	0.0000	180.00	No Ice	2.70	2.70	0.05
			0.00			1/2" Ice	3.10	3.10	0.07
			0.00			1" Ice	3.50	3.50	0.09
20' x 3" Whip	B	From Leg	3.00	0.0000	190.00	No Ice	6.00	6.00	0.05
			0.00			1/2" Ice	8.03	8.03	0.09
			0.00			1" Ice	10.06	10.06	0.13
20' x 3" Whip	C	From Leg	3.00	0.0000	190.00	No Ice	6.00	6.00	0.05
			0.00			1/2" Ice	8.03	8.03	0.09
			0.00			1" Ice	10.06	10.06	0.13
20' 16 Bay Di-Pole	A	From Leg	3.00	0.0000	190.00	No Ice	4.00	4.00	0.06
			0.00			1/2" Ice	6.00	6.00	0.10
			0.00			1" Ice	8.00	8.00	0.14
Valmont 13' Platform w/o Rails	C	None		0.0000	180.00	No Ice	35.00	35.00	1.50
						1/2" Ice	42.00	42.00	2.50
						1" Ice	49.00	49.00	3.50
20' 4-Bay DiPole	B	From Leg	3.00	0.0000	170.00	No Ice	4.00	4.00	0.06
			0.00			1/2" Ice	6.00	6.00	0.10
			0.00			1" Ice	8.00	8.00	0.14
20' 16-Bay DiPole	A	From Leg	3.00	0.0000	170.00	No Ice	4.00	4.00	0.06
			0.00			1/2" Ice	6.00	6.00	0.10
			0.00			1" Ice	8.00	8.00	0.14
8' x 1 1/4" Whip	A	From Leg	3.00	0.0000	164.00	No Ice	1.20	1.20	0.05
			0.00			1/2" Ice	2.02	2.02	0.06
			0.00			1" Ice	2.84	2.84	0.07
6' Side mount w/ Service Grating	A	From Leg	3.00	0.0000	160.00	No Ice	7.00	7.00	0.24
			0.00			1/2" Ice	8.12	8.12	0.26
			0.00			1" Ice	9.24	9.24	0.28
6' Side mount w/ Service Grating	B	From Leg	3.00	0.0000	160.00	No Ice	7.00	7.00	0.24
			0.00			1/2" Ice	8.12	8.12	0.26
			0.00			1" Ice	9.24	9.24	0.28
6' x 1/2" Yagi	A	From Leg	3.00	0.0000	150.00	No Ice	0.60	0.60	0.03
			0.00			1/2" Ice	1.22	1.22	0.04
			0.00			1" Ice	1.84	1.84	0.05
6' Side mount w/ Service Grating	A	From Leg	3.00	0.0000	147.00	No Ice	7.00	7.00	0.24
			0.00			1/2" Ice	8.12	8.12	0.26
			0.00			1" Ice	9.24	9.24	0.28
20' 16 Bay DiPole	A	From Leg	3.00	0.0000	125.00	No Ice	4.00	4.00	0.06
			0.00			1/2" Ice	6.00	6.00	0.10
			0.00			1" Ice	8.00	8.00	0.14
(2) 12' Yagi	B	From Leg	3.00	0.0000	121.00	No Ice	2.00	2.00	0.03
			0.00			1/2" Ice	3.02	3.02	0.05
			0.00			1" Ice	4.04	4.04	0.07
6' Side Mount w/ Service Grating	A	From Leg	3.00	0.0000	115.00	No Ice	7.00	7.00	0.24
			0.00			1/2" Ice	8.12	8.12	0.26
			0.00			1" Ice	9.24	9.24	0.28
6' Side Mount w/ Service Grating	B	From Leg	3.00	0.0000	115.00	No Ice	7.00	7.00	0.24
			0.00			1/2" Ice	8.12	8.12	0.26
			0.00			1" Ice	9.24	9.24	0.28
TMA	A	From Leg	3.00	0.0000	104.00	No Ice	1.69	0.85	0.02
			0.00			1/2" Ice	1.87	0.98	0.03
			0.00			1" Ice	2.05	1.11	0.04
22"x10"x3/4" Panel	A	From Leg	3.00	0.0000	104.00	No Ice	2.14	0.23	0.03
			0.00			1/2" Ice	2.35	0.38	0.03
			0.00			1" Ice	2.56	0.53	0.03

Description	Face or Leg	Offset Type	Offsets: Horz Lateral Vert ft ft ft	Azimuth Adjustment °	Placement ft		C_AA_A Front ft^2	C_AA_A Side ft^2	Weight K
(2) WPA-70063/8CF-EDIN-4	A	From Leg	3.00	30.0000	73.00	No Ice	10.66	5.98	0.02
			0.00			1/2" Ice	11.26	6.55	0.07
			0.00			1" Ice	11.86	7.12	0.12
(2) WPA-70063/8CF-EDIN-4	B	From Leg	3.00	30.0000	73.00	No Ice	10.66	5.98	0.02
			0.00			1/2" Ice	11.26	6.55	0.07
			0.00			1" Ice	11.86	7.12	0.12
(2) WPA-70063/8CF-EDIN-4	C	From Leg	3.00	30.0000	73.00	No Ice	10.66	5.98	0.02
			0.00			1/2" Ice	11.26	6.55	0.07
			0.00			1" Ice	11.86	7.12	0.12
8' x 1 1/2" Whip	A	From Leg	3.00	0.0000	77.00	No Ice	1.20	1.20	0.05
			0.00			1/2" Ice	2.02	2.02	0.06
			0.00			1" Ice	2.84	2.84	0.07
8' x 1 1/2" Whip	B	From Leg	3.00	0.0000	77.00	No Ice	1.20	1.20	0.05
			0.00			1/2" Ice	2.02	2.02	0.06
			0.00			1" Ice	2.84	2.84	0.07
Pirod 12' Platform w/ handrails	C	None		0.0000	73.00	No Ice	26.30	26.30	1.92
						1/2" Ice	35.60	35.60	2.34
						1" Ice	44.90	44.90	2.76
18" Whip	A	From Leg	3.00	0.0000	52.00	No Ice	0.41	0.41	0.01
			0.00			1/2" Ice	0.56	0.56	0.01
			0.00			1" Ice	0.71	0.71	0.01
(3) 12" Yagi	A	From Leg	3.00	0.0000	26.50	No Ice	0.41	0.41	0.01
			0.00			1/2" Ice	0.56	0.56	0.01
			0.00			1" Ice	0.71	0.71	0.01
2.5' Yagi	A	From Leg	3.00	0.0000	26.50	No Ice	2.08	2.08	0.03
			0.00			1/2" Ice	3.79	3.79	0.05
			0.00			1" Ice	5.50	5.50	0.07
6' Side mount w/ Service grating	A	From Leg	3.00	0.0000	52.00	No Ice	7.00	7.00	0.24
			0.00			1/2" Ice	8.12	8.12	0.26
			0.00			1" Ice	9.24	9.24	0.28
6' Side mount w/ Service grating	A	From Leg	3.00	0.0000	26.50	No Ice	7.00	7.00	0.24
			0.00			1/2" Ice	8.12	8.12	0.26
			0.00			1" Ice	9.24	9.24	0.28
5'x6.5' Ice Shield	A	From Leg	3.00	0.0000	112.00	No Ice	2.50	2.50	0.33
			0.00			1/2" Ice	3.13	3.13	0.49
			0.00			1" Ice	3.76	3.76	0.65
4'x5.5' Ice Shield	A	From Leg	3.00	0.0000	85.00	No Ice	2.30	2.30	0.22
			0.00			1/2" Ice	2.88	2.88	0.33
			0.00			1" Ice	3.46	3.46	0.44
Andrew SBNH-1D6565C w/ mount pipe	A	From Leg	3.00	0.0000	73.00	No Ice	11.41	9.60	0.09
			0.00			1/2" Ice	12.03	11.02	0.18
			0.00			1" Ice	12.65	12.29	0.27
Andrew SBNH-1D6565C w/ mount pipe	B	From Leg	3.00	0.0000	73.00	No Ice	11.41	9.60	0.09
			0.00			1/2" Ice	12.03	11.02	0.18
			0.00			1" Ice	12.65	12.29	0.27
Andrew SBNH-1D6565C w/ mount pipe	C	From Leg	3.00	0.0000	73.00	No Ice	11.41	9.60	0.09
			0.00			1/2" Ice	12.03	11.02	0.18
			0.00			1" Ice	12.65	12.29	0.27
Ericsson AIR 32 w/ mount pipe	A	From Leg	3.00	0.0000	73.00	No Ice	6.71	5.63	0.12
			0.00			1/2" Ice	7.18	6.35	0.17
			0.00			1" Ice	7.65	7.10	0.24
Ericsson AIR 32 w/ mount pipe	B	From Leg	3.00	0.0000	73.00	No Ice	6.71	5.63	0.12
			0.00			1/2" Ice	7.18	6.35	0.17
			0.00			1" Ice	7.65	7.10	0.24
Ericsson AIR 32 w/ mount pipe	C	From Leg	3.00	0.0000	73.00	No Ice	6.71	5.63	0.12
			0.00			1/2" Ice	7.18	6.35	0.17
			0.00			1" Ice	7.65	7.10	0.24

Description	Face or Leg	Offset Type	Offsets: Horz Lateral Vert ft ft ft	Azimuth Adjustment °	Placement ft		C_AA_A Front ft^2	C_AA_A Side ft^2	Weight K
••									
Side Arm Mount	A	From Leg	1.00	0.0000	72.00	No Ice	1.50	1.50	0.03
			0.00			1/2" Ice	1.74	1.75	0.04
			0.00			1" Ice	1.98	2.00	0.04
Side Arm Mount	B	From Leg	1.00	0.0000	72.00	No Ice	1.50	1.50	0.03
			0.00			1/2" Ice	1.74	1.75	0.04
			0.00			1" Ice	1.98	2.00	0.04
Side Arm Mount	C	From Leg	1.00	0.0000	72.00	No Ice	1.50	1.50	0.03
			0.00			1/2" Ice	1.74	1.75	0.04
			0.00			1" Ice	1.98	2.00	0.04
RRUS12 w/ 4' mount pipe	A	From Leg	1.00	0.0000	73.00	No Ice	4.19	2.33	0.07
			0.00			1/2" Ice	4.58	2.76	0.11
			0.00			1" Ice	5.00	3.21	0.14
RRUS12 w/ 4' mount pipe	B	From Leg	1.00	0.0000	73.00	No Ice	4.19	2.33	0.07
			0.00			1/2" Ice	4.58	2.76	0.11
			0.00			1" Ice	5.00	3.21	0.14
RRUS12 w/ 4' mount pipe	C	From Leg	1.00	0.0000	73.00	No Ice	4.19	2.33	0.07
			0.00			1/2" Ice	4.58	2.76	0.11
			0.00			1" Ice	5.00	3.21	0.14
Raycap RCMDC-3315-PF-48 w/ 4' mount pipe	C	From Leg	1.00	0.0000	73.00	No Ice	3.98	3.17	0.04
			0.00			1/2" Ice	4.37	3.63	0.08
			0.00			1" Ice	4.76	4.12	0.12

Dishes

Description	Face or Leg	Dish Type	Offset Type	Offsets: Horz Lateral Vert ft	Azimuth Adjustment °	3 dB Beam Width °	Elevation ft	Outside Diameter ft		Aperture Area ft^2	Weight K
6 Ft Dish	B	Paraboloid w/Radome	From Leg	3.00	0.0000		110.00	6.00	No Ice	28.27	0.14
				0.00					1/2" Ice	29.05	0.29
				0.00					1" Ice	29.83	0.44
6 Ft Dish (HP)	A	Paraboloid w/Radome	From Leg	3.00	-25.0000		89.00	6.00	No Ice	28.27	0.38
				0.00					1/2" Ice	29.07	0.62
				0.00					1" Ice	29.87	0.86
P-105A48-2	A	Paraboloid w/Radome	From Leg	3.00	0.0000		80.00	4.00	No Ice	12.57	0.11
				0.00					1/2" Ice	13.09	0.18
				0.00					1" Ice	13.61	0.25
PADX6-59AC	A	Paraboloid w/Radome	From Leg	3.00	25.0000		65.00	6.00	No Ice	28.30	0.19
				0.00					1/2" Ice	29.05	0.33
				0.00					1" Ice	29.80	0.47
KP4F-25	B	Grid	From Leg	3.00	0.0000		59.00	4.00	No Ice	10.05	0.05
				0.00					1/2" Ice	13.09	0.12
				0.00					1" Ice	16.13	0.19

Load Combinations

Comb. No.	Description
1	Dead Only
2	1.2 Dead+1.6 Wind 0 deg - No Ice
3	0.9 Dead+1.6 Wind 0 deg - No Ice
4	1.2 Dead+1.6 Wind 30 deg - No Ice
5	0.9 Dead+1.6 Wind 30 deg - No Ice
6	1.2 Dead+1.6 Wind 60 deg - No Ice
7	0.9 Dead+1.6 Wind 60 deg - No Ice
8	1.2 Dead+1.6 Wind 90 deg - No Ice
9	0.9 Dead+1.6 Wind 90 deg - No Ice
10	1.2 Dead+1.6 Wind 120 deg - No Ice
11	0.9 Dead+1.6 Wind 120 deg - No Ice
12	1.2 Dead+1.6 Wind 150 deg - No Ice
13	0.9 Dead+1.6 Wind 150 deg - No Ice
14	1.2 Dead+1.6 Wind 180 deg - No Ice
15	0.9 Dead+1.6 Wind 180 deg - No Ice
16	1.2 Dead+1.6 Wind 210 deg - No Ice
17	0.9 Dead+1.6 Wind 210 deg - No Ice
18	1.2 Dead+1.6 Wind 240 deg - No Ice
19	0.9 Dead+1.6 Wind 240 deg - No Ice
20	1.2 Dead+1.6 Wind 270 deg - No Ice
21	0.9 Dead+1.6 Wind 270 deg - No Ice
22	1.2 Dead+1.6 Wind 300 deg - No Ice
23	0.9 Dead+1.6 Wind 300 deg - No Ice
24	1.2 Dead+1.6 Wind 330 deg - No Ice
25	0.9 Dead+1.6 Wind 330 deg - No Ice
26	1.2 Dead+1.0 Ice+1.0 Temp
27	1.2 Dead+1.0 Wind 0 deg+1.0 Ice+1.0 Temp
28	1.2 Dead+1.0 Wind 30 deg+1.0 Ice+1.0 Temp
29	1.2 Dead+1.0 Wind 60 deg+1.0 Ice+1.0 Temp
30	1.2 Dead+1.0 Wind 90 deg+1.0 Ice+1.0 Temp
31	1.2 Dead+1.0 Wind 120 deg+1.0 Ice+1.0 Temp
32	1.2 Dead+1.0 Wind 150 deg+1.0 Ice+1.0 Temp
33	1.2 Dead+1.0 Wind 180 deg+1.0 Ice+1.0 Temp
34	1.2 Dead+1.0 Wind 210 deg+1.0 Ice+1.0 Temp
35	1.2 Dead+1.0 Wind 240 deg+1.0 Ice+1.0 Temp
36	1.2 Dead+1.0 Wind 270 deg+1.0 Ice+1.0 Temp
37	1.2 Dead+1.0 Wind 300 deg+1.0 Ice+1.0 Temp
38	1.2 Dead+1.0 Wind 330 deg+1.0 Ice+1.0 Temp
39	Dead+Wind 0 deg - Service
40	Dead+Wind 30 deg - Service
41	Dead+Wind 60 deg - Service
42	Dead+Wind 90 deg - Service
43	Dead+Wind 120 deg - Service
44	Dead+Wind 150 deg - Service
45	Dead+Wind 180 deg - Service
46	Dead+Wind 210 deg - Service
47	Dead+Wind 240 deg - Service
48	Dead+Wind 270 deg - Service
49	Dead+Wind 300 deg - Service
50	Dead+Wind 330 deg - Service

Maximum Tower Deflections - Service Wind

Section No.	Elevation ft	Horz. Deflection in	Gov. Load Comb.	Tilt °	Twist °
L1	180 - 130	29.579	39	1.7472	0.0196
L2	134 - 82.67	14.999	50	1.1886	0.0120
L3	88 - 41.67	6.020	50	0.6597	0.0061

Section No.	Elevation ft	Horz. Deflection in	Gov. Load Comb.	Tilt °	Twist °
L4	48 - 0	1.769	50	0.3371	0.0026

Critical Deflections and Radius of Curvature - Service Wind

Elevation ft	Appurtenance	Gov. Load Comb.	Deflection in	Tilt °	Twist °	Radius of Curvature ft
190.00	20' x 3" Whip	39	29.579	1.7472	0.0199	31060
180.00	Lightning Rod 5/8x4'	39	29.579	1.7472	0.0199	31060
170.00	20' 4-Bay DiPole	39	26.150	1.6265	0.0181	15530
164.00	8' x 1 1/4" Whip	39	24.125	1.5540	0.0171	9706
160.00	6' Side mount w/ Service Grating	39	22.799	1.5055	0.0164	7764
150.00	6' x 1/2" Yagi	39	19.601	1.3842	0.0147	5175
147.00	6' Side mount w/ Service Grating	39	18.683	1.3477	0.0142	4705
125.00	20' 16 Bay DiPole	50	12.779	1.0778	0.0107	3758
121.00	(2) 12' Yagi	50	11.876	1.0289	0.0102	3958
115.00	6' Side Mount w/ Service Grating	50	10.610	0.9563	0.0094	4302
112.00	5'x6.5' Ice Shield	50	10.015	0.9206	0.0090	4497
110.00	6 Ft Dish	50	9.632	0.8971	0.0088	4637
104.00	TMA	50	8.541	0.8281	0.0080	5116
89.00	6 Ft Dish (HP)	50	6.163	0.6694	0.0063	6780
85.00	4'x5.5' Ice Shield	50	5.601	0.6311	0.0058	6926
80.00	P-105A48-2	50	4.938	0.5856	0.0053	6807
77.00	8' x 1 1/2" Whip	50	4.560	0.5595	0.0050	6732
73.00	(2) WPA-70063/8CF-EDIN-4	50	4.083	0.5259	0.0046	6632
72.00	Side Arm Mount	50	3.968	0.5177	0.0045	6608
65.00	PADX6-59AC	50	3.214	0.4623	0.0039	6441
59.00	KP4F-25	50	2.641	0.4170	0.0034	6304
52.00	18" Whip	50	2.059	0.3658	0.0029	6153
26.50	(3) 12" Yagi	50	0.685	0.1848	0.0013	10991

Maximum Tower Deflections - Design Wind

Section No.	Elevation ft	Horz. Deflection in	Gov. Load Comb.	Tilt °	Twist °
L1	180 - 130	135.442	24	7.9912	0.0896
L2	134 - 82.67	68.978	24	5.4564	0.0548
L3	88 - 41.67	27.716	24	3.0354	0.0282
L4	48 - 0	8.154	24	1.5531	0.0118

Critical Deflections and Radius of Curvature - Design Wind

Elevation ft	Appurtenance	Gov. Load Comb.	Deflection in	Tilt °	Twist °	Radius of Curvature ft
190.00	20' x 3" Whip	24	135.442	7.9912	0.0904	7065
180.00	Lightning Rod 5/8x4'	24	135.442	7.9912	0.0904	7065
170.00	20' 4-Bay DiPole	24	119.832	7.4443	0.0826	3531

Elevation ft	Appurtenance	Gov. Load Comb.	Deflection in	Tilt °	Twist °	Radius of Curvature ft
164.00	8' x 1 1/4" Whip	24	110.610	7.1157	0.0779	2205
160.00	6' Side mount w/ Service Grating	24	104.568	6.8962	0.0748	1763
150.00	6' x 1/2" Yagi	24	89.995	6.3456	0.0672	1172
147.00	6' Side mount w/ Service Grating	24	85.809	6.1797	0.0649	1064
125.00	20' 16 Bay DiPole	24	58.791	4.9519	0.0492	842
121.00	(2) 12' Yagi	24	54.643	4.7287	0.0467	885
115.00	6' Side Mount w/ Service Grating	24	48.827	4.3976	0.0431	958
112.00	5'x6.5' Ice Shield	24	46.092	4.2346	0.0413	1000
110.00	6 Ft Dish	24	44.328	4.1270	0.0401	1030
104.00	TMA	24	39.314	3.8109	0.0367	1132
89.00	6 Ft Dish (HP)	24	28.374	3.0803	0.0287	1483
85.00	4'x5.5' Ice Shield	24	25.787	2.9040	0.0267	1512
80.00	P-105A48-2	24	22.734	2.6949	0.0243	1485
77.00	8' x 1 1/2" Whip	24	20.998	2.5749	0.0230	1468
73.00	(2) WPA-70063/8CF-EDIN-4	24	18.800	2.4206	0.0212	1446
72.00	Side Arm Mount	24	18.271	2.3830	0.0208	1440
65.00	PADX6-59AC	24	14.804	2.1284	0.0179	1403
59.00	KP4F-25	24	12.167	1.9202	0.0156	1373
52.00	18" Whip	24	9.488	1.6852	0.0131	1340
26.50	(3) 12" Yagi	24	3.162	0.8522	0.0058	2391

Section Capacity Table

Section No.	Elevation ft	Component Type	Size	Critical Element	P K	ϕP_{allow} K	% Capacity	Pass Fail
L1	180 - 130	Pole	TP24.7x13.2x0.219	1	-4.93	1134.94	55.9	Pass
L2	130 - 82.67	Pole	TP35.14x23.342x0.3125	2	-12.54	2310.20	59.9	Pass
L3	82.67 - 41.67	Pole	TP43.96x33.2899x0.469	3	-27.96	4636.04	51.3	Pass
L4	41.67 - 0	Pole	TP52.6x41.5642x0.5625	4	-48.13	6812.08	53.0	Pass
							Summary	
						Pole (L2)	59.9	Pass
						RATING =	59.9	Pass

ANCHOR BOLTS

M_u = 3763 ft-k
V_u = 40.00 k
P_u = 48.00 k

$P_u = \frac{4M_u}{ND} - \frac{P_u}{N}$

Anet = 3.25 in^2

Net Area - See AISC 9th Ed, pg 4-147

B.C. = 61.00 in
BOLT DIA = 2.25 in
NO. OF BOLTS= 24
η = 0.50

AB Material = A615-75
F_y = 75 ksi
F_u = 100 ksi

$P_u = \frac{4 \times 3763 \times 12}{24 \times 61 \text{ in}} + \frac{(48 \text{ k})}{24} =$ 125.38 k (Per Anchor)

$V_u = \frac{40 \text{ k}}{24} =$ 1.67 k

ϕR_{nt} = 0.8*Anet*Fu = 260.00 k

$\frac{P_u + V_u}{\phi R_{nt}} / \eta$ = 0.495 O.K. (49.5% Capacity)

BASE PLATE CHECK

Pole Base Dia = 52.60 in
B. PL. t = 3.000 in
B. PL Fy = 60 ksi
B. PL Shape (SQR/CIRC) = CIRC
B. PL. Dia. = 67.00 in
B. PL Center Hole Dia = 49.000 in

A.B. Pattern (Corner/Circ) = circ
A. B. Hole Dia = 2.500 in

B_{eff_1} = 30.89 in B.C. Chord at pole
B_{eff_2} = 53.34 in Horiz d between bolts + 10t
P_u = 480.61 k
B. P.L Moment (M_u) = 1415 k-in Due to Pu
$f_b = M_u/Z_x$ = 20.36 ksi < phi*Fy O.K.
ϕ Fy = 54.00 ksi (37.8% Capacity)

HUTTER
TRANKINA
ENGINEERING CO., P.C.
Consulting Structural Engineers
32 W 273 Army Trail Road, Suite 100
WAYNE, ILLINOIS 60184
Tel. (630) 513-6711 Fax (630) 513-2925

JOB: 13294B
SHEET NO: 11 OF
CALC BY: DATE: 07/01/14
CHECK BY: DATE:
SCALE:

VICINITY MAP

REGIONAL MAP

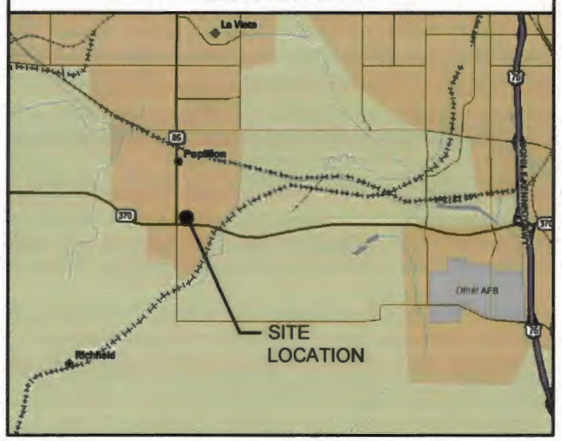

GENERAL LOCATION

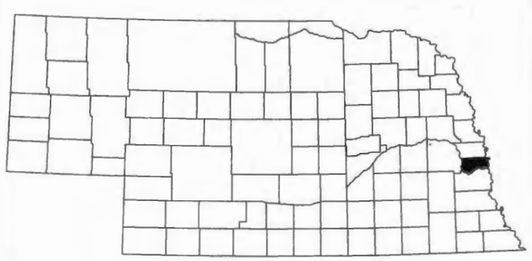

verizonwireless

OMA PAPILLION (ALLTEL)

PCS CARRIER ADD

12010 GOLDEN GATE DR.
PAPILLION, NE 68046

DIRECTIONS

FROM I-80 AND I-680 INTERSECTION:
TAKE I-80 WEST, TAKE EXIT TO L ST./SR-92/US-275 EAST, TURN SOUTH ONTO 84TH ST./SR 85/WASHINGTON ST., TURN EAST CEDARDALE RD., TURN SOUTH ONTO GOLDEN GATE DR. AND ARRIVE AT SITE.

THESE DOCUMENTS ARE DRAWN TO SCALE FOR 24X36 SIZE SHEET. DOCUMENTS PRINTED IN 11X17 SIZE SHEET ARE REDUCED TO HALF THE ORIGINAL SCALE.

Diggers Hotline of Nebraska
344-3565 (METRO OMAHA)
1-800-331-5666 (STATEWIDE)

SHEET INDEX

SHEET	DESCRIPTION	REV.
T-1	TITLE SHEET	A
C-1	TOWER ELEVATIONS	B
C-1A	MOUNTING DETAIL	B
C-2	SHELTER PLAN	A
C-3	ANTENNA SCHEDULE	B
C-4	ANTENNA CONFIGURATIONS	B
C-5	COAX INFORMATION	B
C-6	PLUMBING DIAGRAM	A
C-7	SITE PHOTOS	A
C-8	SITE PHOTOS	A

VERIZON WIRELESS DEPARTMENTAL APPROVALS

	NAME	DATE
RF ENGINEER		
OPERATIONS MANAGER		
CONSTRUCTION ENGINEER		
CONSTRUCTION MANAGER		
REAL ESTATE MANAGER		
LANDLORD		

PROJECT INFORMATION

SITE NAME:
OMA PAPILLION (ALLTEL)

ADDRESS (FROM SITE PLACARD):
1210 GOLDEN GATE DR.
PAPILLION, NE 68046

LATITUDE (FROM VZW DATA):
41° 08' 29.00" N

LONGITUDE (FROM VZW DATA):
96° 02' 23.00" W

ANTENNA TIP HEIGHT:
77'-0" A.G.L.

STRUCTURE HEIGHT:
180' ± A.G.L.
MONOPOLE TOWER

OVERALL STRUCTURE HEIGHT:
200' ± A.G.L.

STRUCTURAL CONSULTANT:
HUTTER TRANKINA ENGINEERING
32 W 273 ARMY TRAIL RD,
SUITE #100
WAYNE, IL 60184
(630) 513-6711

SITE NAME:
UNINHABITED SHELTER
2009 INTERNATIONAL BUILDING CODE
2008 NATIONAL ELECTRIC CODE
TIA/EIA-222-G OR LATEST EDITION
STRUCTURE CLASS II
TOPOGRAPHIC CATEGORY 1
EXPOSURE CATEGORY B

PROJECT DESCRIPTION:
CONTRACTOR SHALL WORK DIRECTLY WITH VERIZON NETWORK OPERATIONS MANAGER, REGARDING THE AWS ANTENNAS AND LINE ADDITION. ALL ANTENNA AND LINE WORK SHALL BE PERFORMED SUCH THAT THERE IS NO INTERRUPTION IN COMMERCIAL SERVICE BETWEEN THE HOURS OF 5:00 A.M. AND 11:00 P.M. THREE SECTOR 850 CDMA, LTE, AWS, PCS (3) AIR32, (3) ERICSSON RRUS-12, (1) 1-5/8" HYBRID CABLE, (1) TOP DISTRIBUTION BOX.

LESSEE:
VERIZON WIRELESS
10801 BUSH LAKE ROAD
BLOOMINGTON, MN 55438
CONTACT: TERRI DOLEZAL
PHONE: (402) 436-4278
FAX: (402) 436-5041

SITE ACQUISITION:
VERIZON WIRELESS
10801 BUSH LAKE ROAD
BLOOMINGTON, MN 55438
CONTACT: TERRI DOLEZAL
PHONE: (402) 436-4278
FAX: (402) 436-5041

CONSTRUCTION ENGINEER:
VERIZON WIRELESS
1620 M STREET
LINCOLN, NE 68508
CONTACT: SCOTT HORKY
PHONE: (402) 436-4723
CELL: (402) 470-1134
FAX: (402) 436-5041

CONSULTING ENGINEER:
TERRA CONSULTING GROUP, LTD.
600 BUSSE HIGHWAY
PARK RIDGE, IL 60068
CONTACT: DENNIS MURPHY
PHONE: (847) 698-6400
FAX: (847) 698-6401

verizonwireless
10801 Bush Lake Rd
Bloomington, MN 55438

TERRA CONSULTING GROUP, LTD.
600 Busse Highway
Park Ridge, IL 60068
Ph: 847/698-6400
Fax: 847/698-6401

REVISIONS

NO.	DESCRIPTION	DATE	BY
A	ISSUED FOR REVIEW	06/10/14	DMS
B	REVISED PER CLIENT COMMENTS	06/24/14	DMS

OMA PAPILLION (ALLTEL)

1210 GOLDEN GATE DR.
PAPILLION, NE 68046

DRAWN BY:	DMS
CHECKED BY:	DM
DATE:	05/19/14
PROJECT #:	63-092

SHEET TITLE
TITLE SHEET

SHEET NUMBER
T-1

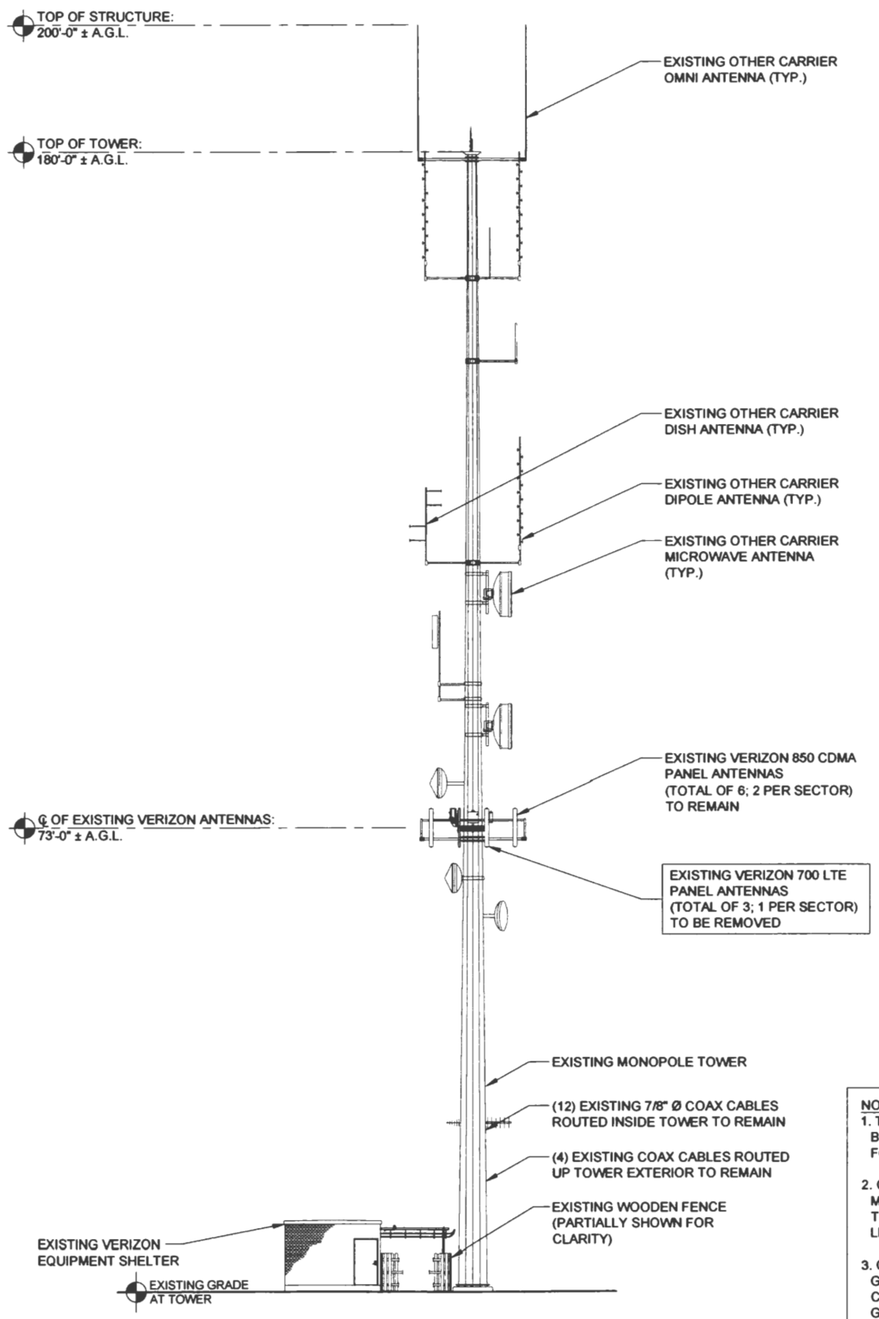

1 EXISTING TOWER ELEVATION
SCALE: 3/32" = 1'-0"

24" x 36" PRINT IS THE FULL SCALE FORMAT. ANY SIZE OTHER THAN THAT IS AT REDUCED SCALE.

CONTRACTOR TO PIM/SWEEP CDMA AND LTE COAX DURING MAINTENANCE WINDOW (11:00PM-5:00AM) BEFORE COMPLETING ANTENNA SWAP. CONTRACTOR SHALL BRING TO THE SITE ENOUGH JUMPERS AND MAIN-LINE CONNECTORS SHOULD PIM/SWEEP TESTING FAIL, AND INCLUDE THIS IN THE ORIGINAL SCOPE OF WORK. CONTRACTOR TO PROVIDE PRE-SWAP PIM/SWEEP TEST RESULTS OF BOTH THE COAX AS WELL AS THE ANTENNAS TO BE INSTALLED TO VZW CONSTRUCTION AND RF ENGINEERS PRIOR TO COMPLETION OF ANTENNA SWAP. ANTENNA SWAP TO OCCUR BETWEEN THE HOURS OF 9:00AM-3:00PM. DOWNTIME PER SECTOR SHALL BE LIMITED TO 30 MINUTES OR LESS. POST-INSTALLATION PIM/SWEEP TESTING SHALL OCCUR DURING THE MAINTENANCE WINDOW HOURS OF 11:00PM-5:00AM.

NOTES:

1. TOWER/ANTENNA DESIGN AND ANALYSIS BY OTHERS. TOWER OWNER RESPONSIBLE FOR REVIEW OF PROPOSED ANTENNAS.
2. CONTRACTOR SHALL CUT ANTENNA MOUNTING PIPES IN FIELD TO LENGTH THAT SHALL NOT EXCEED OVERALL LENGTH OF ANTENNA.
3. CONTRACTOR TO PROVIDE AND INSTALL GROUND KITS AND TINNED PLATED COPPER BUSS BARS AT INTERVALS NO GREATER THAN 100'. ALL GROUND BARS ARE TO BE GALVANIZED STEEL.
4. CONTRACTOR TO SHIP ALL REMOVED ANTENNAS, MOUNTS, TMA'S, COAX, ETC. TO FORD STORAGE, OMAHA, NE.
5. CONTRACTOR SHALL VERIFY THAT NO ANTENNAS ARE ABOVE THE BEACON.

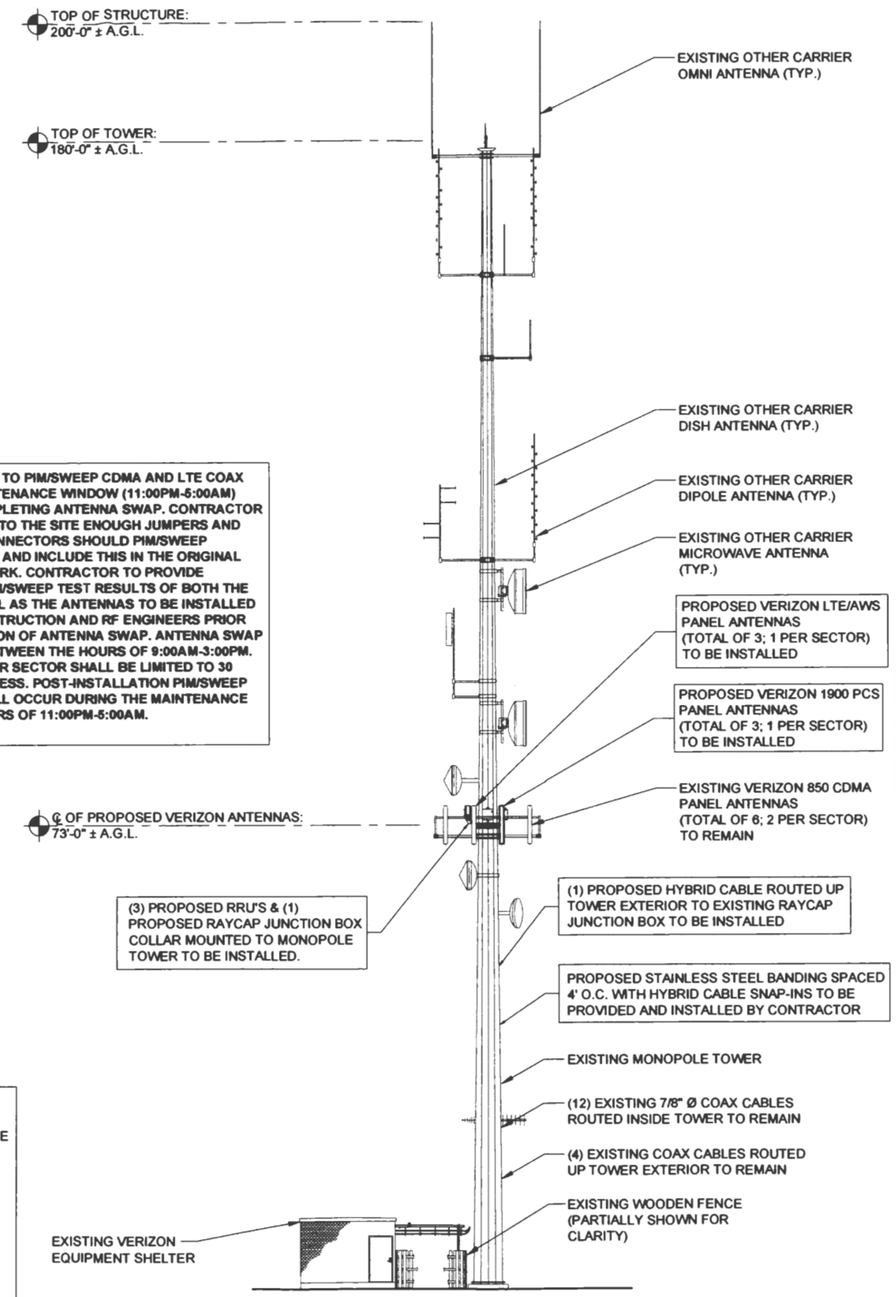

2 PROPOSED TOWER ELEVATION
SCALE: 3/32" = 1'-0"

verizon wireless
10801 Bush Lake Rd
Bloomington, MN 55438

TERRA CONSULTING GROUP, LTD.
600 Busse Highway
Park Ridge, IL 60068
Ph: 847/698-6400
Fax: 847/698-6401

REVISIONS

NO.	DESCRIPTION	DATE	BY
A	ISSUED FOR REVIEW	06/10/14	DMS
B	REVISED PER CLIENT COMMENTS	06/24/14	DMS

OMA PAPILLION (ALLTEL)

1210 GOLDEN GATE DR.
PAPILLION, NE 68046

DRAWN BY:	DMS
CHECKED BY:	DM
DATE:	05/19/14
PROJECT #:	63-092

SHEET TITLE
TOWER ELEVATIONS

SHEET NUMBER
C-1

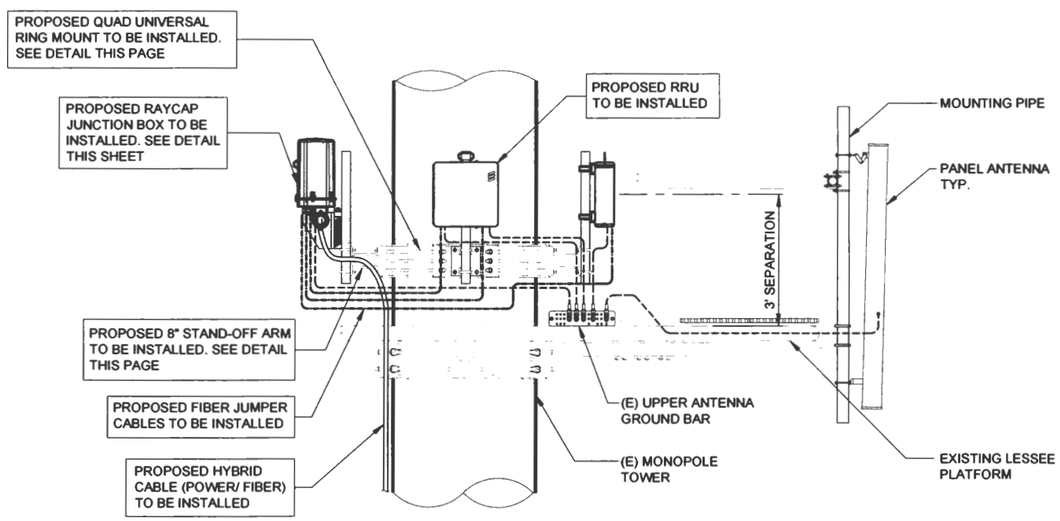

NOTE:
G.C. TO GROUND ALL NEW COMPONENTS TO EXISTING GROUND BAR.

1 ANTENNA, RRU & RAYCAP JUNCTION BOX MOUNTING DETAIL
SCALE: N.T.S.

ORDERING INFORMATION	
APPLICATION:	MONOPOLE
DESIGN:	8" STANDOFF ARM
FEATURE:	ACCEPTS 2-3/8" Ø & 2-7/8" Ø PIPES
MOUNTS TO:	RING MOUNT
MATERIAL:	HOT DIP GALVANIZED STEEL
INCLUDES:	HARDWARE

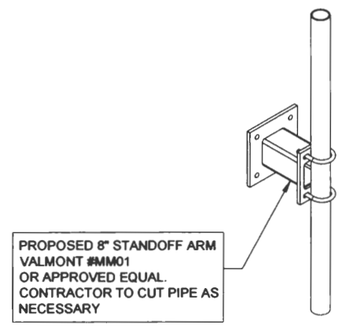

3 8" STANDOFF ARM
SCALE: N.T.S.

ORDERING INFORMATION	
APPLICATION:	MONOPOLE
DESIGN:	4 SECTOR CLAMP-ON MOUNT
FEATURE:	FITS BROAD RANGE OF POLE SIZES
MOUNTS TO:	12" TO 60" OD MONOPOLES
MATERIAL:	HOT DIP GALVANIZED STEEL
INCLUDES:	MOUNT AND THREADED ROD
ORDER SEPARATELY:	ARMS

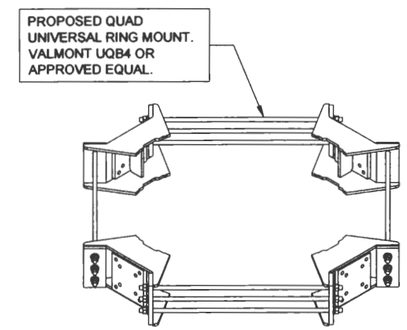

4 QUAD UNIVERSAL RING MOUNT
SCALE: N.T.S.

SPECIFICATIONS	DC SURGE PROTECTION FOR RRU/INTEGRATED ANTENNA RADIO HEAD
APPLICATION:	TOWER / BASE / ROOFTOP / ROOFTOP DISTRIBUTION MODELS
WEIGHT:	32LBS (14.51 KG)

[mm]
INCHES

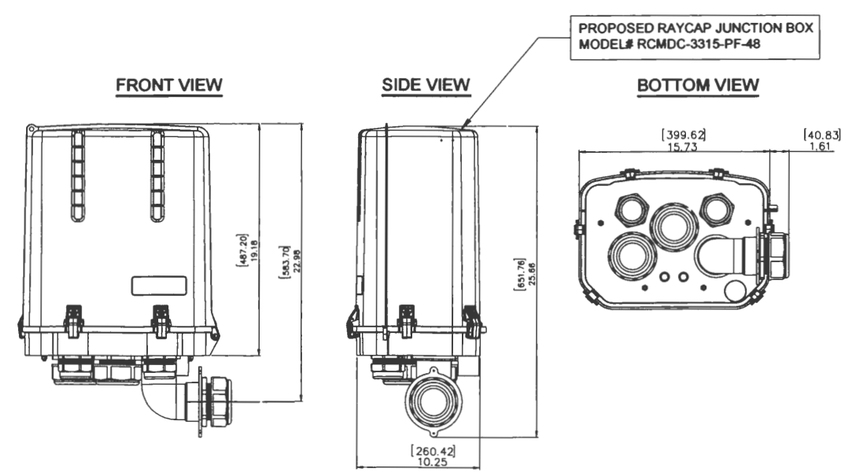

NOTE:
G.C. TO PROVIDE AND INSTALL ALL REQUIRED DISTRIBUTION BOX MOUNTING HARDWARE

2 RAYCAP JUNCTION BOX DETAIL
SCALE: N.T.S.

verizonwireless
10801 Bush Lake Rd
Bloomington, MN 55438

TERRA CONSULTING GROUP, LTD.
600 Busse Highway
Park Ridge, IL 60068
Ph: 847/698-6400
Fax: 847/698-6401

REVISIONS

NO.	DESCRIPTION	DATE	BY
A	ISSUED FOR REVIEW	06/10/14	DMS
B	REVISED PER CLIENT COMMENTS	06/24/14	DMS

OMA PAPILLION (ALLTEL)

1210 GOLDEN GATE DR.
PAPILLION, NE 68046

DRAWN BY:	DMS
CHECKED BY:	DM
DATE:	05/19/14
PROJECT #:	63-092

SHEET TITLE
MOUNTING DETAIL

SHEET NUMBER
C-1A

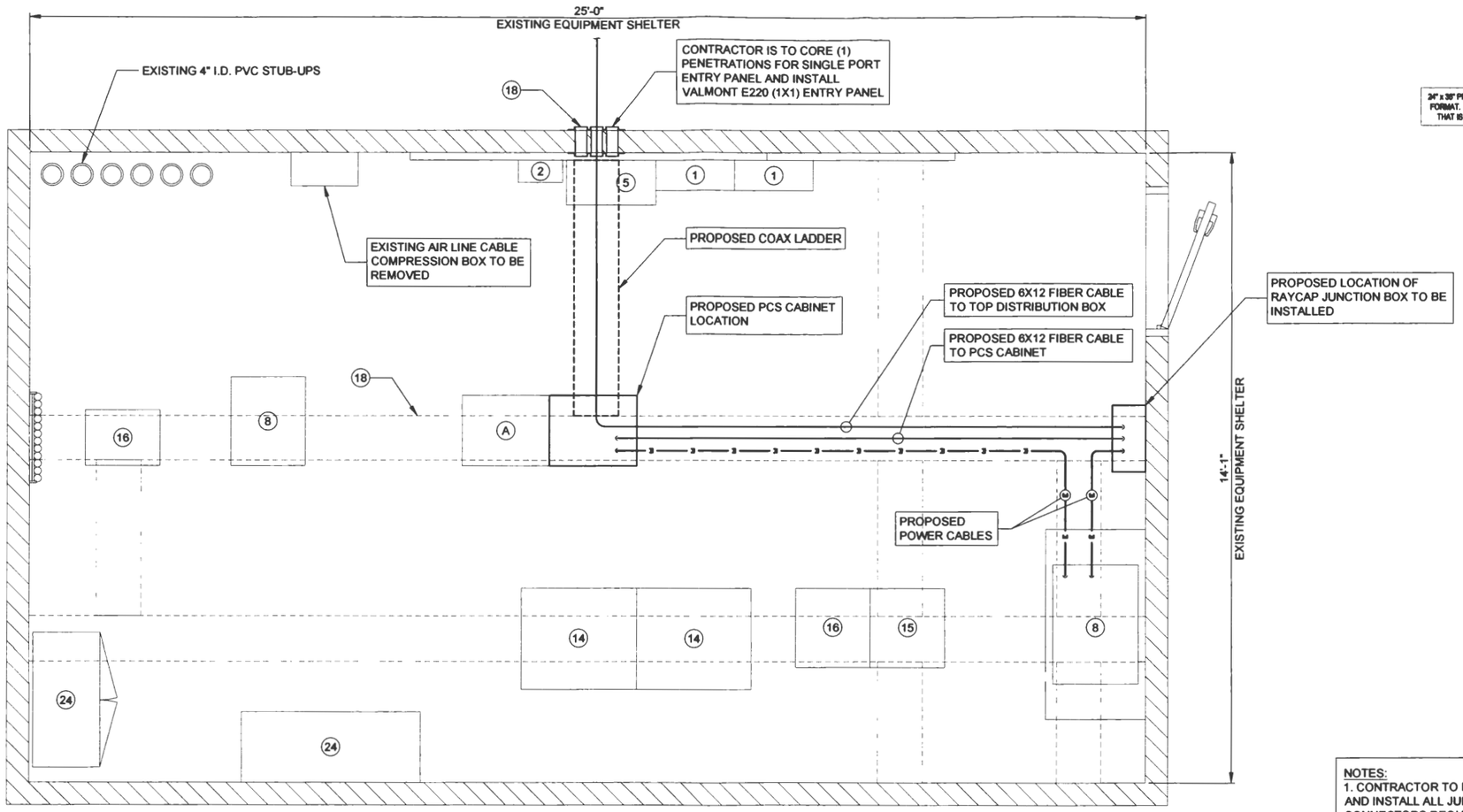

1 SHELTER PLAN
SCALE: 3/4" = 1'-0"

SCALE 3/4" = 1'-0"

24" x 36" PRINT IS THE FULL SCALE FORMAT. ANY SIZE OTHER THAN THAT IS AT REDUCED SCALE.

NOTES:
1. CONTRACTOR TO PROVIDE AND INSTALL ALL JUMPERS AND CONNECTORS REQUIRED.

2. PROPOSED RET CABLE TO BE PROVIDED BY VERIZON AND INSTALLED BY CONTRACTOR.

3. CONTRACTOR SHALL PROVIDE AND INSTALL HORIZONTAL AND VERTICAL CABLE TRAY REQUIRED TO ROUTE CABLING TO AND FROM THE FIBER FIF RACK.

EQUIPMENT LEGEND

- (A) LTE EQUIPMENT CABINET
- (B) PCS EQUIPMENT CABINET
- (1) ELECTRICAL PANEL
- (2) AC SERVICE DISCONNECT
- (3) DC DISTRIBUTION PANEL
- (4) DC POWER PANEL
- (5) TRANSFER SWITCH
- (6) MAIN LOAD CENTER
- (7) BATTERY
- (8) BATTERY/ RECTIFIER
- (9) RECTIFIER
- (10) TELCO BOARD
- (11) TELCO GROUND BAR
- (12) LUCENT EQUIPMENT CABINET
- (13) HVAC UNIT
- (14) MOTOROLA EQUIPMENT CABINET
- (15) FIF RACK
- (16) EQUIPMENT RACK (E)
- (17) CABLE ENTRANCE PANEL/PORT (USED)
- (18) CABLE ENTRANCE PANEL/PORT
- (19) EXISTING CABLE LADDER
- (20) FIRE EXTINGUISHER
- (21) FIRE SUPPRESSION SYSTEM
- (22) THERMOSTAT/ HVAC CONTROLS
- (23) ALARM JUNCTION BOX
- (24) DESK
- (25) SHELF

ACRONYM LEGEND

LTE:	LONG TERM EVOLUTION	RRU:	REMOTE RADIO UNIT
FIF:	FACILITY INTERFACE FRAME	RET:	REMOTE ELECTRICAL TILT
TDMA:	TIME DIVISION MULTIPLE ACCESS	TMA:	TOWER MOUNTED AMPLIFIER
CDMA:	CODE DIVISION MULTIPLE ACCESS	CMU:	CONCRETE MASONRY UNIT
GSM:	GLOBAL SYSTEM FOR MOBILE COMMUNICATIONS	GPS:	GLOBAL POSITIONING SYSTEM
UMTS:	UNIVERSAL MOBILE TELECOMMUNICATIONS SYSTEM	HVAC:	HEATING VENTILATION & AIR CONDITIONING

verizonwireless
10801 Bush Lake Rd
Bloomington, MN 55438

TERRA CONSULTING GROUP, LTD.
600 Busse Highway
Park Ridge, IL 60068
Ph: 847/698-6400
Fax: 847/698-6401

REVISIONS

NO.	DESCRIPTION	DATE	BY
A	ISSUED FOR REVIEW	05/10/14	DMS
B	REVISED PER CLIENT COMMENTS	05/24/14	DMS

OMA PAPILLION (ALLTEL)

1210 GOLDEN GATE DR.
PAPILLION, NE 68046

DRAWN BY:	DMS
CHECKED BY:	DM
DATE:	05/19/14
PROJECT #:	63-092

SHEET TITLE
SHELTER PLAN

SHEET NUMBER
C-2

EXISTING ANTENNA KEY												EXISTING COAX KEY								EXISTING TTA/TMA KEY			
ANT. POS.	MOUNT AZIMUTH	FUNCTION	QTY	ANTENNA MODEL	ANTENNA TECHNOLOGY	ANT. LENGTH	ANT. TIP	RAD CENTER	DT ELEC.	DT MECH.	STATUS	QTY	COAX TYPE	MFR.	MODEL	DIELECTRIC	DIAMETER	LENGTH	STATUS	QTY	MODEL	VENDOR	STATUS
1 - 1.1	30°	T/R 0	1	WPA-70063-8CF-EDIN-4	850 CDMA	94.6"	76.94'	73'	0	6	EXISTING	1	MAIN	ANDREW	LDF5-50	FOAM	7/8"	100'	EXISTING				
1 - 2.1	30°	T/R 0	1	X7C-865-4D	700 LTE	96"	77'	73'	0	5	REMOVE	1	MAIN	ANDREW	LDF5-50	FOAM	7/8"	100'	EXISTING				
1 - 2.2		T/R 1		2ND PORT								1	MAIN	ANDREW	LDF5-50	FOAM	7/8"	100'	EXISTING				
1 - 3.1																							
1 - 4.1	30°	T/R 0	1	WPA-70063-8CF-EDIN-4	850 CDMA	94.6"	76.94'	73'		6	EXISTING	1	MAIN	ANDREW	LDF5-50	FOAM	7/8"	100'	EXISTING				
2 - 5.1	150°	T/R 0	1	WPA-70063-8CF-EDIN-4	850 CDMA	94.6"	76.94'	73'	0	2	EXISTING	1	MAIN	ANDREW	LDF5-50	FOAM	7/8"	100'	EXISTING				
2 - 6.1	150°	T/R 0	1	X7C-865-4D	700 LTE	96"	77'	73'	0	5	REMOVE	1	MAIN	ANDREW	LDF5-50	FOAM	7/8"	100'	EXISTING				
2 - 6.2		T/R 1		2ND PORT								1	MAIN	ANDREW	LDF5-50	FOAM	7/8"	100'	EXISTING				
2 - 7.1																							
2 - 8.1	150°	T/R 0	1	WPA-70063-8CF-EDIN-4	850 CDMA	94.6"	76.94'	73'	0	2	EXISTING	1	MAIN	ANDREW	LDF5-50	FOAM	7/8"	100'	EXISTING				
3 - 9.1	270°	T/R 0	1	WPA-70063-8CF-EDIN-4	850 CDMA	94.6"	76.94'	73'	0	4	EXISTING	1	MAIN	ANDREW	LDF5-50	FOAM	7/8"	100'	EXISTING				
3 - 10.1	270°	T/R 0	1	X7C-865-4D	700 LTE	96"	77'	73'	0	4	REMOVE	1	MAIN	ANDREW	LDF5-50	FOAM	7/8"	100'	EXISTING				
3 - 10.2		T/R 1		2ND PORT								1	MAIN	ANDREW	LDF5-50	FOAM	7/8"	100'	EXISTING				
3 - 11.1																							
3 - 12.1	270°	T/R 0	1	WPA-70063-8CF-EDIN-4	850 CDMA	94.6"	76.94'	73'	0	4	EXISTING	1	MAIN	ANDREW	LDF5-50	FOAM	7/8"	100'	EXISTING				
												18	JUMPERS	ANDREW	LDF4-50A	FOAM	1/2"	6'	EXISTING				

1 EXISTING ANTENNA SCHEDULE
N.T.S.

EXISTING ANTENNA KEY												EXISTING COAX KEY								EXISTING TTA/TMA KEY			
ANT. POS.	MOUNT AZIMUTH	FUNCTION	QTY	ANTENNA MODEL	ANTENNA TECHNOLOGY	ANT. LENGTH	ANT. TIP	RAD CENTER	DT ELEC.	DT MECH.	STATUS	QTY	COAX TYPE	MFR.	MODEL	DIELECTRIC	DIAMETER	LENGTH	STATUS	QTY	MODEL	VENDOR	STATUS
1 - 1.1	30°		1	WPA-70063-8CF-EDIN-4	850 CDMA	94.6"	76.94'	73'	0	6	EXISTING	1	MAIN	ANDREW	LFD5-50	FOAM	7/8"	100'	EXISTING				
1 - 2.1	20°	700 T/R 0	1	SBNH-1D6565C	700 LTE	96.42"	77'	73'	7	0	PROPOSED	1	MAIN	ANDREW	LDF5-50	FOAM	7/8"	100'	EXISTING				
1 - 2.2		700 T/R 1		2ND PORT								1	MAIN	ANDREW	LDF5-50	FOAM	7/8"	100	EXISTING				
1 - 2.3		AWS T/R 0	1	3RD PORT	AWS				2	0		1	RRU	ERICSSON	RRUS-12	(1) 1X1 HYBRID JUMPER CABLE ±15' (DISTRIBUTION BOX TO RRH)			PROPOSED				
1 - 2.4		AWS T/R 1		4TH PORT																			
1 - 3.1	30°	T/R 0		AIR 32	PCS	57"	75.375'	73'	2	0	PROPOSED	1				(1) 1X1 HYBRID JUMPER CABLE ±15' (DISTRIBUTION BOX TO ANTENNA)			PROPOSED				
1 - 3.2		T/R 1																					
1 - 4.1	30°		1	WPA-70063-8CF-EDIN-4	850 CDMA	94.6"	76.94'	73'	0	6	EXISTING	1	MAIN	ANDREW	LDF5-50	FOAM	7/8"	100'	EXISTING				
2 - 5.1	150°		1	WPA-70063-8CF-EDIN-4	850 CDMA	94.6"	76.94'	73'	0	4	EXISTING	1	MAIN	ANDREW	LFD5-50	FOAM	7/8"	100'	EXISTING				
2 - 6.1	140°	700 T/R 0	1	SBNH-1D6565C	700 LTE	96.42"	77'	73'	5	0	PROPOSED	1	MAIN	ANDREW	LDF5-50	FOAM	7/8"	100'	EXISTING				
2 - 6.2		700 T/R 1		2ND PORT								1	MAIN	ANDREW	LDF5-50	FOAM	7/8"	100'	EXISTING				
2 - 6.3		AWS T/R 0	1	3RD PORT	AWS				2	0		1	RRU	ERICSSON	RRUS-12	(1) 1X1 HYBRID JUMPER CABLE ±15' (DISTRIBUTION BOX TO RRH)			PROPOSED				
2 - 6.4		AWS T/R 1		4TH PORT																			
2 - 7.1	150°	T/R 0		AIR 32	PCS	57"	75.375'	73'	2	0	PROPOSED	1				(1) 1X1 HYBRID JUMPER CABLE ±15' (DISTRIBUTION BOX TO ANTENNA)			PROPOSED				
2 - 7.2		T/R 1																					
2 - 8.1	150°		1	WPA-70063-8CF-EDIN-4	850 CDMA	94.6"	76.94'	73'		4	EXISTING	1	MAIN	ANDREW	LDF5-50	FOAM	7/8"	100'	EXISTING				
3 - 9.1	270°		1	WPA-70063-8CF-EDIN-4	850 CDMA	94.6"	76.94'	73'	0	6	EXISTING	1	MAIN	ANDREW	LFD5-50	FOAM	7/8"	100'	EXISTING				
3 - 10.1	280°	700 T/R 0	1	SBNH-1D6565C	700 LTE	96.42"	77'	73'	5	0	PROPOSED	1	MAIN	ANDREW	LDF5-50	FOAM	7/8"	100'	EXISTING				
3 - 10.2		700 T/R 1		2ND PORT								1	MAIN	ANDREW	LDF5-50	FOAM	7/8"	100'	EXISTING				
3 - 10.3		AWS T/R 0	1	3RD PORT	AWS				2	0		1	RRU	ERICSSON	RRUS-12	(1) 1X1 HYBRID JUMPER CABLE ±15' (DISTRIBUTION BOX TO RRH)			PROPOSED				
3 - 10.4		AWS T/R 1		4TH PORT																			
3 - 11.1	270°	T/R 0		AIR 32	PCS	57"	75.375'	73'	2	0	PROPOSED	1				(1) 1X1 HYBRID JUMPER CABLE ±15' (DISTRIBUTION BOX TO ANTENNA)			PROPOSED				
3 - 11.2		T/R 1																					
3 - 12.1	270°		1	WPA-70063-8CF-EDIN-4	850 CDMA	94.6"	76.94'	73'		6	EXISTING	1	MAIN	ANDREW	LDF5-50	FOAM	7/8"	100"	EXISTING				
												12	JUMPERS	ANDREW	LDF4-50A	FOAM	1/2"	6'	EXISTING				

ADDITIONAL :
(2) DISTRIBUTION BOXES (1 IN SHELTER, 1 ON TOWER)
(1) 6X12 HYBRID CABLE ±100' (DISTRIBUTION BOX TO DISTRIBUTION BOX)
(1) SHELTER POWER CABLE ±9' (POWER PLANT TO DISTRIBUTION BOX)
(1) SHELTER POWER CABLE ±23' (POWER PLANT TO PCS)
(1) FIBER CABLE ±16' (PCS TO DISTRIBUTION BOX)
(3) HYBRID JUMPER CABLES (DISTIBUTIO BOX TO ANTENNAS)
(3) HFT412-2S29-15 (±15') HYBRID JUMPER CABLES (DISTRIBUTION BOX TO RRU)

NOTE:
CONTRACTOR IS TO OBTAIN MOST RECENT SDF AND IS RESPONSIBLE FOR SETTING ALL ADJUSTABLE ELECTRICAL TILTS TO MATCH KEY.

2 PROPOSED ANTENNA SCHEDULE
N.T.S.

verizonwireless
10801 Bush Lake Rd.
Bloomington, MN 55438

TERRA CONSULTING GROUP, LTD.
600 Busse Highway
Park Ridge, IL 60068
Ph: 847/698-6400
Fax: 847/698-6401

REVISIONS

NO.	DESCRIPTION	DATE	BY
A	ISSUED FOR REVIEW	06/10/14	DMS
B	REVISED PER CLIENT COMMENTS	06/24/14	DMS

OMA
PAPILLION
(ALLTEL)

1210 GOLDEN GATE DR.
PAPILLION, NE 68046

DRAWN BY:	DMS
CHECKED BY:	DM
DATE:	05/19/14
PROJECT #:	63-092

SHEET TITLE
ANTENNA SCHEDULE

SHEET NUMBER
C-3

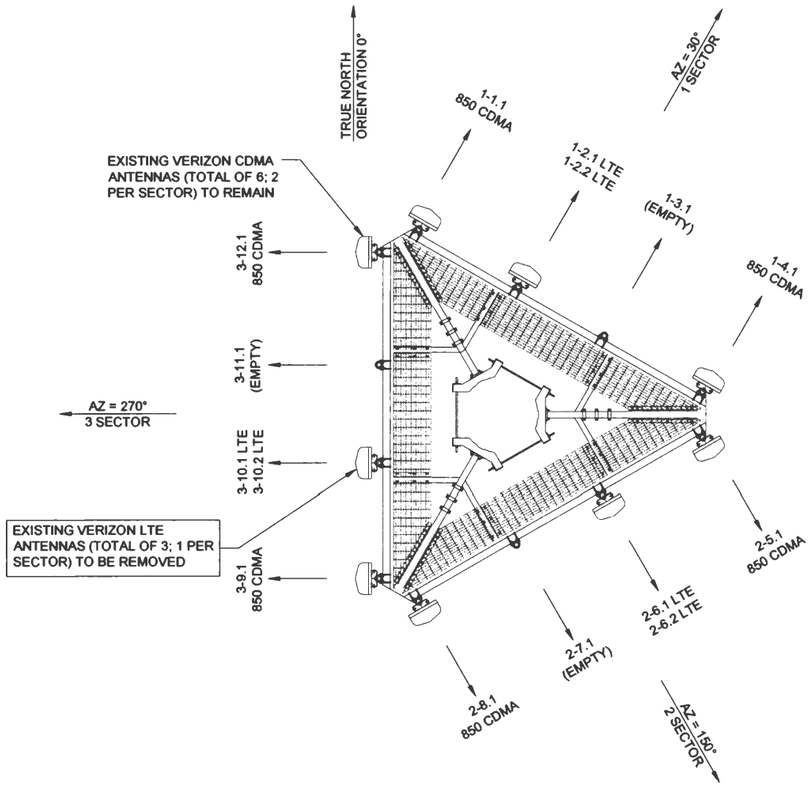

1 EXISTING ANTENNA LAYOUT
N.T.S.

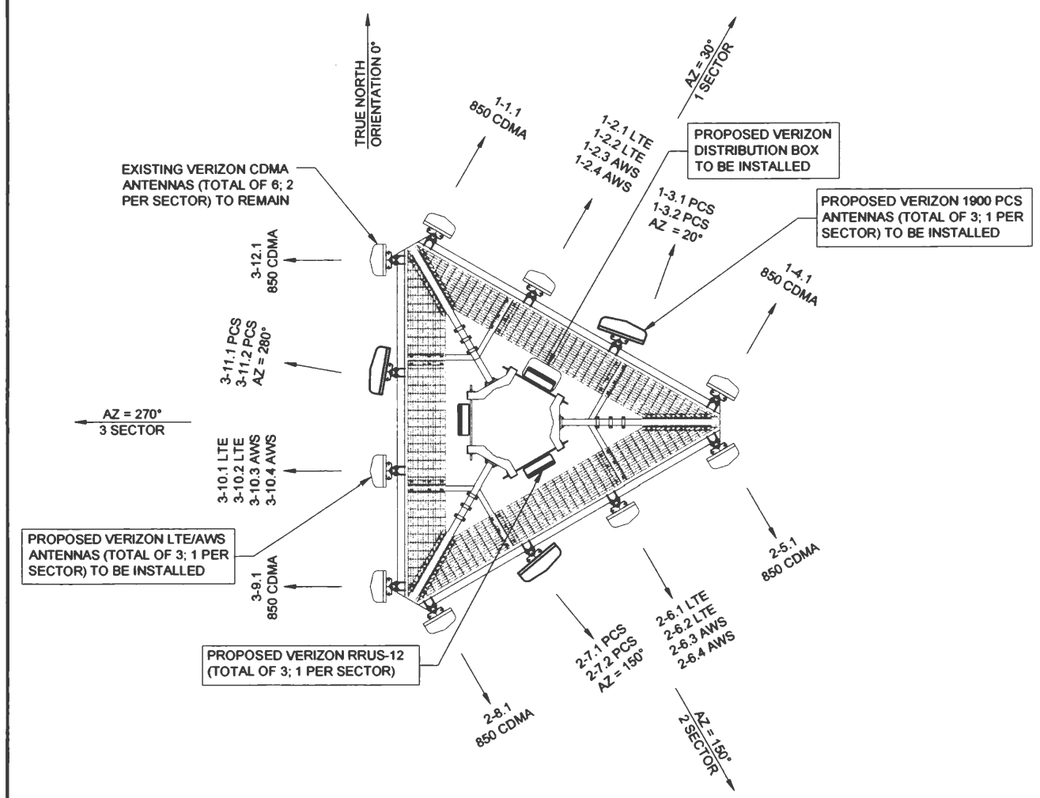

2 PROPOSED ANTENNA LAYOUT
N.T.S.

NOTES:

1. CONTRACTOR TO SHIP ALL REMOVED ANTENNAS, MOUNTS AND TMA'S TO FOR STORAGE IN OMAHA, NE.
2. CONTRACTOR TO VERIFY THE REMOVAL OF ANTENNAS OR COAX CABLES PRIOR TO REMOVAL.
3. EXISTING COAX CABLE HAS BEEN FIELD VERIFIED BY ASSOCIATED ENGINEERING.
4. CONTRACTOR TO PROVIDE AND INSTALL ANTENNA MOUNTING PIPES, U-BOLTS, AND ALL ASSOCIATED HARDWARE FOR MOUNTING PROPOSED ANTENNAS, RRU'S, DISTRIBUTION BOXES AND TMA'S.

verizonwireless
10801 Bush Lake Rd
Bloomington, MN 55438

TERRA CONSULTING GROUP, LTD.
600 Busse Highway
Park Ridge, IL 60068
Ph: 847/698-6400
Fax: 847/698-6401

REVISIONS

NO.	DESCRIPTION	DATE	BY
A	ISSUED FOR REVIEW	06/10/14	DMS
B	REVISED PER CLIENT COMMENTS	06/24/14	DMS

OMA PAPILLION (ALLTEL)

1210 GOLDEN GATE DR.
PAPILLION, NE 68046

DRAWN BY:	DMS
CHECKED BY:	DM
DATE:	05/19/14
PROJECT #:	63-092

SHEET TITLE
ANTENNA CONFIGURATIONS

SHEET NUMBER
C-4

NOTE:

1. CONTRACTOR TO PROVIDE AND INSTALL COAX ATTACHMENT TO TOWER HARDWARE.

2. CONTRACTOR TO SWEEP TEST EXISTING COAX CABLES AND VERIFY THEY ARE IN GOOD WORKING ORDER.

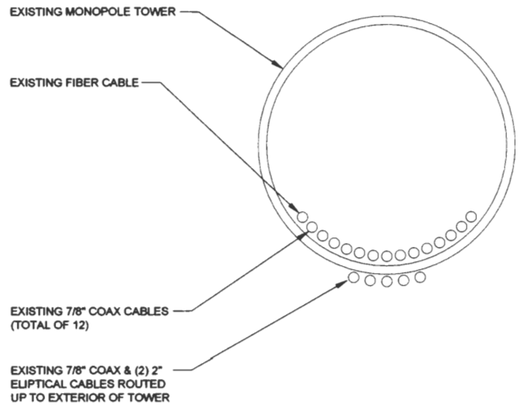

1 EXISTING COAX CONFIGURATION
N.T.S.

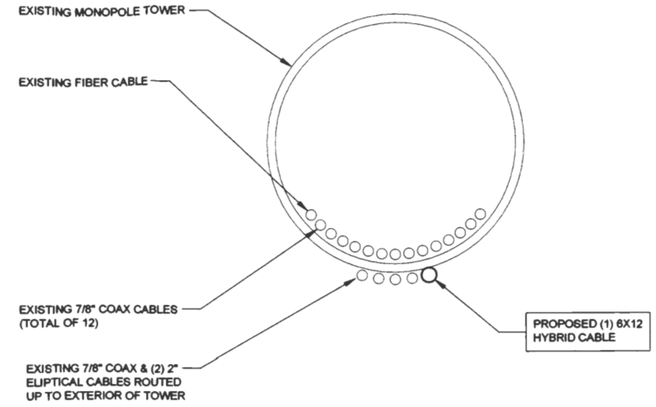

2 PROPOSED COAX CONFIGURATION
N.T.S.

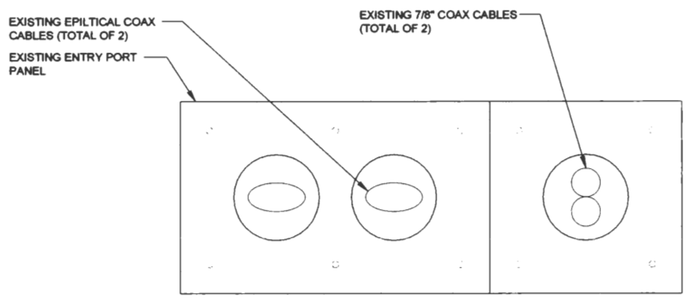

3 EXISTING ENTRY PANEL DETAIL (INSIDE SHELTER)
N.T.S.

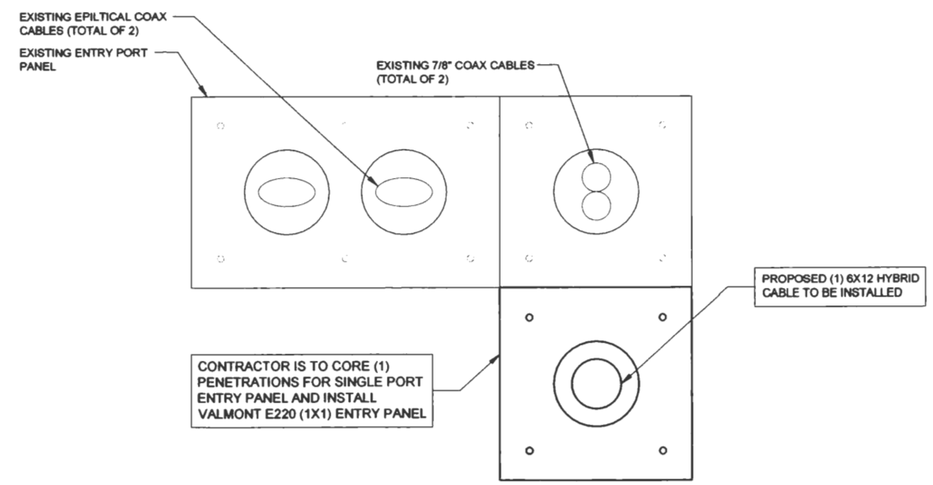

4 PROPOSED ENTRY PANEL DETAIL (INSIDE SHELTER)
N.T.S.

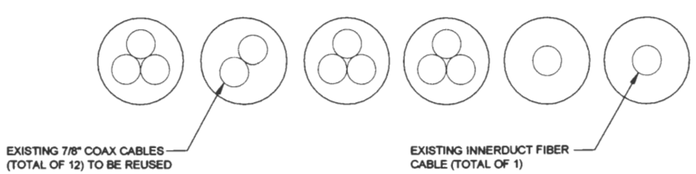

5 EXISTING COAX FLOOR ROUTE DETAIL (INSIDE SHELTER)
N.T.S.

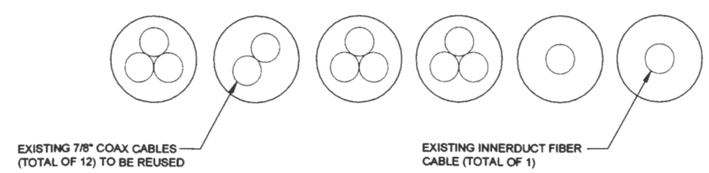

6 PROPOSED COAX FLOOR ROUTE DETAIL (INSIDE SHELTER)
N.T.S.

verizon wireless
10801 Bush Lake Rd
Bloomington, MN 55438

TERRA CONSULTING GROUP, LTD.
600 Busse Highway
Park Ridge, IL 60068
Ph: 847/698-6400
Fax: 847/698-6401

REVISIONS

NO.	DESCRIPTION	DATE	BY
A	ISSUED FOR REVIEW	06/10/14	DMS
B	REVISED PER CLIENT COMMENTS	06/24/14	DMS

OMA
PAPILLION
(ALLTEL)

1210 GOLDEN GATE DR.
PAPILLION, NE 68046

DRAWN BY:	DMS
CHECKED BY:	DM
DATE:	05/19/14
PROJECT #:	63-092

SHEET TITLE
COAX INFORMATION

SHEET NUMBER
C-5

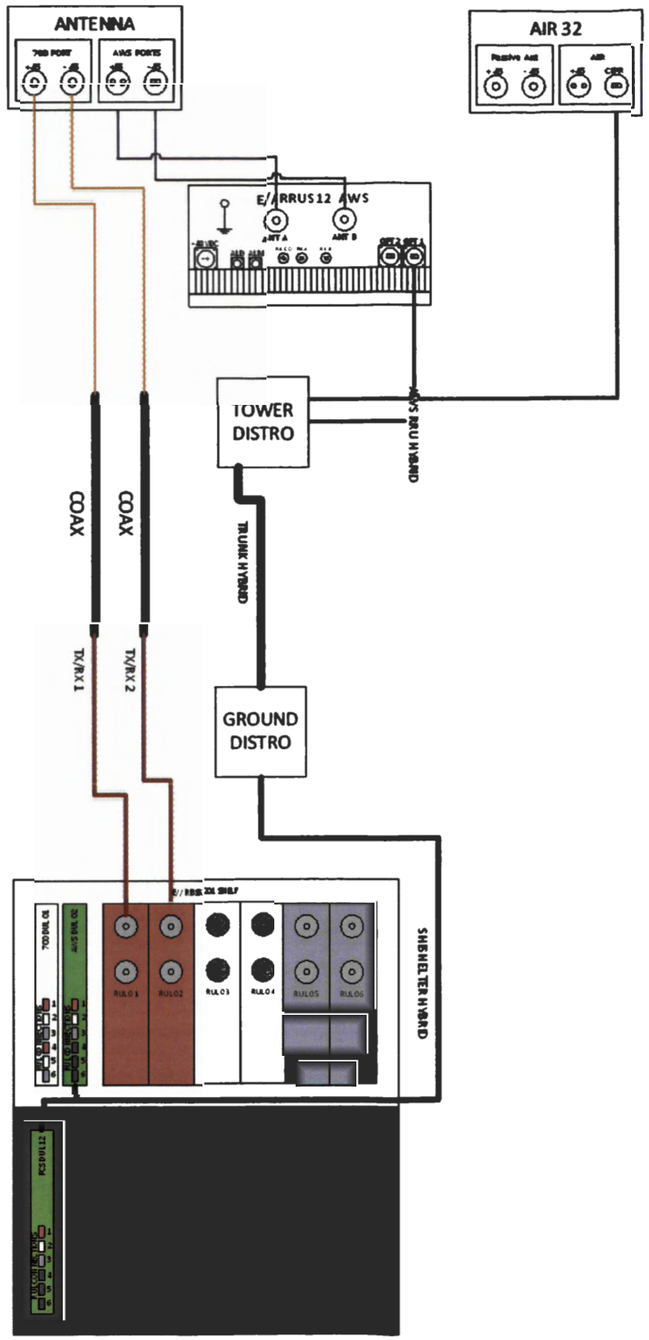

1 PLUMBING DIAGRAM
N.T.S.

verizon wireless
10801 Bush Lake Rd
Bloomington, MN 55438

TERRA CONSULTING GROUP, LTD.
600 Busse Highway
Park Ridge, IL 60068
Ph: 847/698-6400
Fax: 847/698-6401

REVISIONS

NO	DESCRIPTION	DATE	BY
A	ISSUED FOR REVIEW	06/10/14	DMS
B	REVISED PER CLIENT COMMENTS	06/24/14	DMS

OMA
PAPILLION
(ALLTEL)

1210 GOLDEN GATE DR.
PAPILLION, NE 68046

DRAWN BY:	DMS
CHECKED BY:	DM
DATE:	05/19/14
PROJECT #:	63-092

SHEET TITLE
PLUMBING DIAGRAM

SHEET NUMBER
C-6

1 EXISTING TOWER PHOTO
N.T.S.

2 EXISTING COAX ENTRY PORT (OUTSIDE SHELTER)
N.T.S.

3 EXISTING TRAPEZE
N.T.S.

4 EXISTING VERTICAL COAX ROUTING
N.T.S.

5 EXISTING COAX ENTRY PORT (INSIDE SHELTER)
N.T.S.

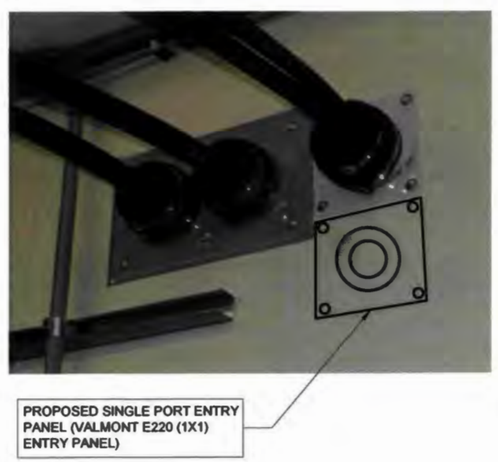

6 EXISTING COAX ENTRY PORT (INSIDE SHELTER)
N.T.S.

7 PROPOSED DISTRIBUTION BOX VICNITY
N.T.S.

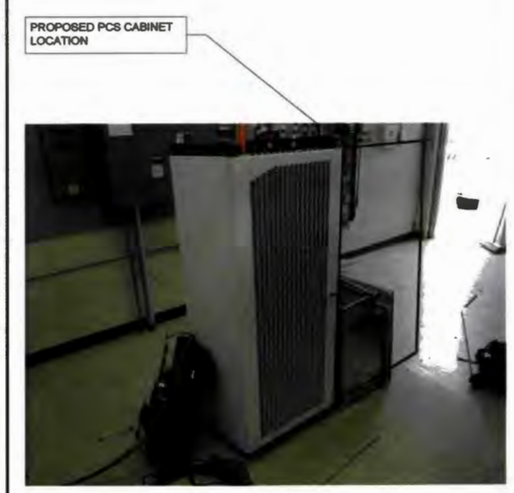

8 PROPOSED PCS CABINET LOCATION
N.T.S.

verizonwireless
10801 Bush Lake Rd
Bloomington, MN 55438

TERRA CONSULTING GROUP, LTD.
600 Busse Highway
Park Ridge, IL 60068
Ph: 847/698-6400
Fax: 847/698-6401

REVISIONS

NO.	DESCRIPTION	DATE	BY
A	ISSUED FOR REVIEW	05/19/14	DMS
B	REVISED PER CLIENT COMMENTS	06/24/14	DMS

OMA PAPILLION (ALLTEL)

1210 GOLDEN GATE DR.
PAPILLION, NE 68046

DRAWN BY:	DMS
CHECKED BY:	DM
DATE:	05/19/14
PROJECT #:	63-092

SHEET TITLE
SITE PHOTOGRAPHS

SHEET NUMBER
C-7

1 EXISTING ANTENNA - ALPHA SECTOR
N.T.S.

2 EXISTING ANTENNA - BETA SECTOR
N.T.S.

3 EXISTING ANTENNA - GAMMA SECTOR
N.T.S.

verizon wireless
10801 Bush Lake Rd.
Bloomington, MN 55438

TERRA CONSULTING GROUP, LTD.
600 Busse Highway
Park Ridge, IL 60068
Ph: 847/698-6400
Fax: 847/698-6401

REVISIONS

NO.	DESCRIPTION	DATE	BY
A	ISSUED FOR REVIEW	06/10/14	DMS
B	REVISED PER CLIENT COMMENTS	06/24/14	DMS

OMA PAPILLION (ALLTEL)

1210 GOLDEN GATE DR.
PAPILLION, NE 68046

DRAWN BY:	DMS
CHECKED BY:	DM
DATE:	05/19/14
PROJECT #:	63-092

SHEET TITLE
SITE PHOTOGRAPHS

SHEET NUMBER
C-8